Michael Riedel

Transformatorenbau GmbH




Riedel Catalogue

Product group C & D

Over 25 years practice in quality products

2003

Product Group

C

The technical development in mobile radio has progressed far. Certainly the user may expect to communicate anytime even during power failure.

The economic manufacture of reliable products in state of the art technology is a chief component of our company philosophy - a good reason for the media industry and their suppliers to apply Riedel products.

Examples of available special application units

Apart from our standard delivery program we develop and manufacture custom makes. Please inquire with us.

Adjustable power supplies series RADC
800W plug-in switch power packs for Telecom and industrial application

- compact size, 800 W in 3U / 17TE
- output voltages 0-120 VDC (depending on design)
- voltage and current adjustable form 0 to max value
- modules plug-in and hot-swappable
- module alarm for remote monitoring
- meets PFC and Telecom standards
- installation both vertical 3U and horizontal 2U

19" sub-rack units series RMSR
robust power module for military and heavy-duty application

- power supply or battery charging systems
- parallel n+1 connection up to 90 A
- series connection up to 360 VDC
- hot-swap plug-in modules
- module failure and mains alarm
- operation temperature -40°C ... +55°C
- 19" 2U sub-rack 2400W/3 modules or 19" 3U sub-rack/4 modules

Adjustable power supplies series RADC
800W high current power supply for Telecom and industrial application

- compact size, portable laboratory unit
- output voltages 0-120 VDC (depending on design)
- voltage and current adjustable via multi-turn potentiometers from 0 to max value
- digital voltage- and current measuring units
- microprocessor controlled
- meets PFC and Telecom standards
- output current limitation against short circuit and wrong polarity
- parallel switching for increased power

Intelligent automatic charger series RALG
universal automatic-charger for 12V, 24V and 42V accumulators

- microprocessor control to identify voltage level and connected battery
- optimized charging process and charging current
- avoidance of overcharge via float charge modus
- protection against wrong polarity
- automatic switch-on and switch-off, therefore minimized sparking, battery pole damage and fire hazard
- full protection mechanisms such as overtemperature switch-off, undervoltage switch-off, reference control and set value / true value comparison

UPS-modules to supply industrial PCs (IPS) series RIPCUSV
Supplement to series RDCUSV

- in case of line failure stabilized output voltage (20,6 VDC)
- adjustable boot time bridging (2-3-4-5 min)
- adjustable UPS-time (0,5 to 30 s), after that signal to IPC via interface
- UPS switch-off via signal of computer, automatic switch-off after adjustable waiting period (4-6-8-10 min)
- short circuit proof
- automatic switch-off at undervoltage accumulator
- automatic charging, IU characteristic

Technical data on our homepage
www.riedel-trafobau.de

D.C. power supplies

We specialize in the manufacture of D.C. power supplies and offer in addition to special designs the following selection as standard delivery program:

Single-phase

Single-phase rectifier transformers,
series RGT, to equip with rectifier,
output 29.5 V AC for 24 V DC

Single-phase compact rectifier transformers,
series GGT, output 24 V DC

Single-phase compact power packs, non-stabilized,
series RTSNL, output 24 V DC

Single-phase compact power packs, non-stabilized,
series RNTU, output 12 V DC or 24 V DC

Single-phase compact power packs, non-stabilized, UL/CSA-approbation
series RNTU...UL, output 24 V DC

Single-phase compact power packs, stabilized,
series RNTG, output 24 V DC

Single-phase compact power packs, stabilized, UL/CSA-approbation
series RNTG...UL, output 24 V DC

Single-phase switch power packs, stabilized, secondary switched
series RSNT, output 24 V DC

Single-phase switch power packs, stabilized, primary switched
series RPL, output 12 VDC, 24 VDC or 48 VDC

IU battery chargers
series RLG, for output 12 V or 24 V Pb-battery

IU battery chargers
series RPL, for output 12 V or 24 V Pb-battery

Pulse battery chargers
series RLEC, for output 12 V or 24 V NiCd-battery

Non-interruptible power supplies
series RDCUSV
activation threshold 22 V DC, output 10 A DC to 40 A DC

Non-interruptible power supplies
series RDCUSV
activation threshold 20.6 V DC, output 10 A DC to 50 A DC

Power supplies with back-up battery
Series RADA, output 12/24/48 VDC

Voltage monitoring modules
Series RCV, operation voltage 24VDC

Three-phase

Three-phase compact rectifier transformers,
series RDRK and RDRKL, output 24 V DC

Three-phase universal, compact rectifier transformers
series RDRKU, output 24 V DC

Three-phase compact rectifier transformers,
series RDRKN, output 24 V DC

Three-phase compact rectifier transformers,
series RDRKS, output 24 V DC

Three-phase compact rectifier transformers,
series RDRKG, output 24 V DC

Three-phase switch power packs, stabilized, secondary switched
series RSNTG, output 24 V DC

Three-phase switch power packs, stabilized, primary switched
series RPL, output 24 VDC

IU battery chargers
series RPL, for output 12 V or 24 V Pb-battery

IU battery chargers
series RLSN, for output 12 V or 24 V Pb-battery

Non-interruptible power supplies
series RSNT GU, output 20 A DC to 60 A DC

Other voltages and designs available on request

Both single- and three-phase rectifier transformers are tapped ± 5% primary for adaptation to the respective mains supply.

The transformer´s secondary side is designed to suit a follow-up bridge rectifier. Suitable are silicon rectifiers or thyristors.

Compact rectifier transformers are equipped with silicon compact bridge rectifiers and must be protected accordingly.

The D.C. voltage delivered by single-phase bridge rectifiers has a residual ripple of 48%. A lower ripple can be achieved with a filtered protection circuit, by using three-phase transformers with subsequent three-phase bridge rectifiers (residual ripple <5%) and by using compact power packs. Stabilized power supplies achieve the lowest residual ripple.

When using rectifier transformers always take care of proper heat dissipation.

On request we supply single- and three-phase power packs as rack units, and special rectifier transformers up to 15000 A.

Single-phase (rectifier) transformers

Safety transformers in conjunction with VDE 0570 part 2-6, EN 61558-2-6

RGT 100 – 630

Design: Open frame design, stationary, for installation and set-up in dry rooms, separate windings, sturdy mounting brackets. Connection to non-tracking transformer terminals with screw connections. The terminals are protected against finger touch or contact with the back of the hand in compliance to accident prevention regulations (VBG 4). All types are designed for use with bridge rectifiers under resistive load.

IP 00, suitable for installation up to protection rating IP 23, insulation class E, max. ambient temperature ta 40°C.

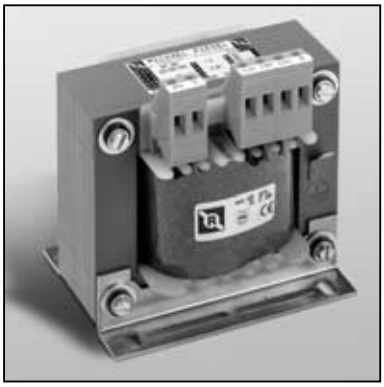

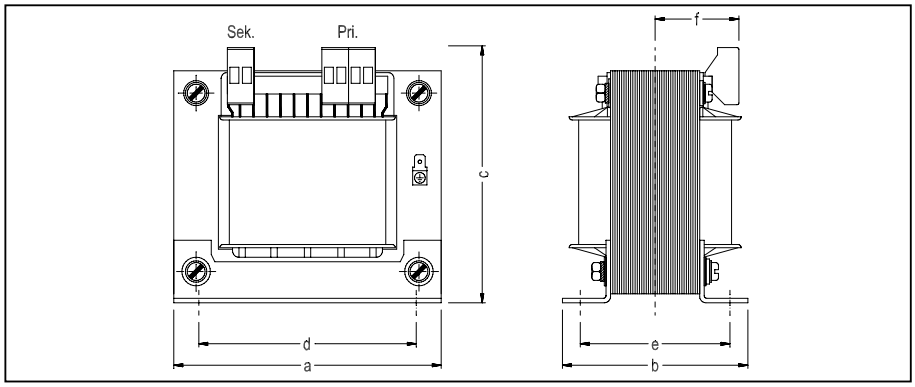

Model	Output	Watt at 24 V DC	Current for	380/400/420 V 29 V AC Article-no.	220/230/240 V 29 V AC Article-no.	Approx. dimensions in mm						
	VA	W	ADC			a	b	c	d	e	f	Attachment
RGT 100	100	72	3	15–400–29–01	15–230–29–01	85	76	95	64	61	53	M 4
RGT 130	130	96	4	15–400–29–02	15–230–29–02	96	77	104	84	61	50	M 5
RGT 160	160	144	6	15–400–29–03	15–230–29–03	96	87	104	84	71	54	M 5
RGT 320	320	216	9	15–400–29–05	15–230–29–05	120	88	120	90	70	53	M 5
RGT 400	400	288	12	15–400–29–06	15–230–29–06	120	103	120	90	82	58	M 5
RGT 500	500	360	15	15–400–29–07	15–230–29–07	120	121	120	90	102	69	M 5
RGT 630	630	432	18	15–400–29–08	15–230–29–08	135	116	133	104	97	63	M 5

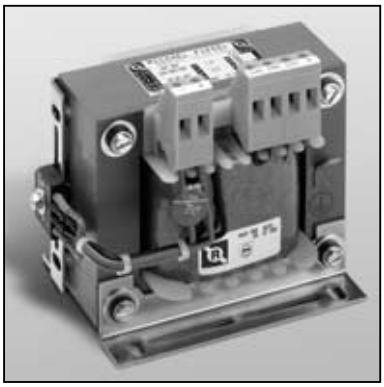

Single-phase compact rectifier transformers

Safety transformers in conjunction with VDE 0570 part 2-6, EN 61558-2-6

GGT 100 – 630 new types with higher current

with connected rectifier, varistor and discharge resistor

Residual ripple 48%, **retrofit** of capacitor is not possible.

Design as above.

Harmonic rule EN 61000-3-2 is observed.

IP 00, suitable for installation up to protection rating IP 23, insulation class E, max. ambient temperature ta 40°C.

Model	Output	Watt at 24 V DC	Current	380/400/420 V 24 V DC Article-no.	220/230/240 V 24 V DC Article-no.	Approx. dimensions in mm					
	VA	W	ADC			a	b	c	d	e	Attachment
GGT 100	100	72	3	16–400–024–01	16–230–024–01	84	76	100	64	61	M 4
GGT 130	130	96	4	16–400–024–02	16–230–024–02	100	77	104	84	61	M 5
GGT 200	200	144	6	16–400–024–03	16–230–024–03	100	87	150	84	71	M 5
GGT 320	320	216	9	16–400–024–05	16–230–024–05	120	93	150	90	70	M 5
GGT 400	400	288	12	16–400–024–06	16–230–024–06	120	108	160	90	82	M 5
GGT 500	500	360	15	16–400–024–07	16–230–024–07	120	125	160	90	102	M 5
GGT 630	630	432	18	16–400–024–08	16–230–024–08	135	138	175	104	97	M 5

Subject to technical modifications

Standard stock items

Single-phase compact power packs

Single-phase safety transformers

comp. VDE 0570 part 2-6, EN 61558-2-6

Noise transmission EN 55011 class B (industry), EN 55022 class B (Telecom)

RTSNL 75 - 800 non-stabilized

Residual ripple: < 5 %

Design:

Open vertical design, stationary, for installation and set-up in dry rooms, sturdy mounting brackets, quick-snap-on for 35 mm DIN rail on request, connections to non-tracking transformer terminals. The terminals are protected against finger touch or contact with the back of the hand in compliance to accident prevention regulations (VBG 4).

On request these units can be provided with extended mounting brackets (as illustrated below). Further to standard types, RTSNL can also be supplied in various primary voltages up to max. AC 690 V and secondary voltages from DC 10 V to DC 50 V at a surcharge. Other voltages and designs available on request.

Harmonic rule EN 61000-3-2 is observed.

IP 00 suitable for installation up to protection rating IP 23, insulation class E, max. ambient temperature ta 40°C.

Standard model:

Substructure/ quick-snap-on:	sturdy mounting brackets, on request metal fastener for 35 mm DIN rail.
Printed circuit board:	epoxy resin FR 4/70 µm Cu, with solder resist and protective lacquer, 1.5 mm, circuit traces fully solder-coated.
Terminals:	polyamide 6.6, screw terminals with wire protection. The terminals are finger and back of hand safe comp. to accident prevention regulations (VBG4)
Two-way rectification:	special rectifier with particularly low flow voltage, resulting in high efficiency.
LED:	green LED, 5 mm.
Fuses:	primary and secondary fuses 5 x 20mm, design comp. to DIN.
Transformer:	safety transformer comp. to VDE 0570, protection rating IP 00.
Varistor:	S 10 K 30, protective varistor against induction peaks.
Residual ripple:	at rated load and 24 V DC < 5%.
Temperature range:	-20°C to +65°C
Input voltage:	220/230/240 V, 50/60 Hz
Output voltage:	24 VDC

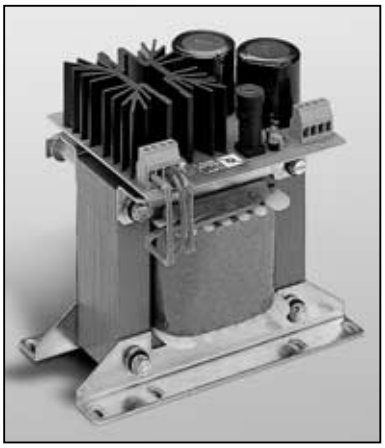

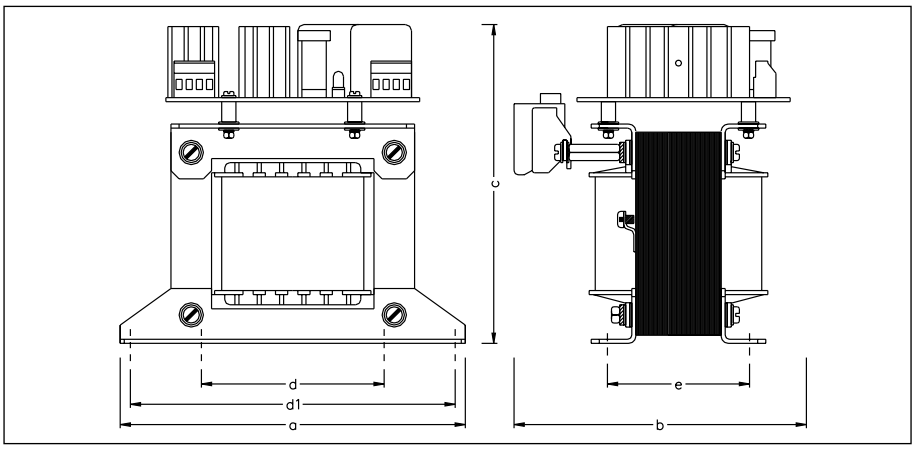

Model	Current	220 / 230 / 240 V DC 24 V			Total weight	Approx. dimensions in mm						
		Standard	Pri.	Sec.								
	A DC	Article no.	fuse	fuse	kg	a	b	c	d	d1	e	Attachment
RTSNL 75	2,0	18–024–01	0,63 At	2,00 Amt	1,70	110	85	115	64	100	48	M 4
RTSNL 100	3,0	18–024–02	0,63 At	2,50 Amt	2,15	110	95	115	64	100	61	M 4
RTSNL 200	5,0	18–024–03	2,50 At	4,00 Amt	4,65	170	145	155	90	160	70	M 5
RTSNL 400	10,0	18–024–04	3,15 At	10,00 Amt	5,85	170	145	170	90	160	82	M 5
RTSNL 600	15,0	18–024–05	5,00 At	-	8,20	190	175	190	104	180	91	M 5
RTSNL 800	20,0	18–024–06	10,00 At	-	9,65	190	190	190	104	180	107	M 5

Standard stock items

Subject to technical modifications

Single-phase compact power packs

Single-phase safety transformers comp. VDE 0570 part 2-6, EN 61558-2-6

Noise transmission EN 55011 class B (industry), EN 55022 class B (Telecom)

RNTU 24S - 240S non-regulated

The enclosed construction of the compact and space-saving power packs series RNTU provides comprehensive protection against accidental contact. The power packs meet the safety requirements for protection against electric shock comp. to VDE 0106 part 101. The modules can be snapped onto the DIN EN 50 022 mounting rail quickly and easily. From DC 5 A upwards there is additional provision for screw-fastening. Identical units can be connected in parallel up to max. 90% load per unit.

The integrated fuses (see table) exclusively deliver short circuit protection and guarantee safe operation even under worst-case conditions. Units are to be loaded only with rated current as indicated.

Series RNTU clearly surpasses the requirements for power packs stated in DIN EN 61131-2 / part 2 and guarantees safe operation without alterations even after the low voltage networks will have converted pursuant to DIN IEC 38 from the year 2003 onwards. Brief dips in line voltage are bridged by large-scale capacitors.

Apart from the specifications listed below, series RNTU can also be supplied in various primary voltages up to max. AC 400 V and secondary voltages ranging from DC 10 V to DC 60 V at a surcharge. However, indicated currents must not be exceeded.

Technical data for model	RNTU 24 S	RNTU 48 S	RNTU 72 S	RNTU 120 S	RNTU 180 S	RNTU 240 S
Input						
Mains input voltage	AC 230 V **or** AC 400 V					
Mains input voltage range	+ 6 % to – 10 % comp. to DIN IEC 38					
Frequency	50 Hz/60 Hz					
Input fuses	5 x 20 mm	5 x 20 mm	5 x 20 mm	5 x 20 mm	6,3 x 32 mm	6,3 x 32 mm
AC 230 V	0,4 time lag	0,8 time lag	1,25 time lag	2,0 time lag	2,5 time lag	4,0 time lag
AC 400 V	external	external	external	external	1,6 time lag	2,5 time lag
Output						
Output voltage EN 61131-2/part 2	DC 24 V **or** DC 12 V, twin terminals					
Status display	green LED					
Output fuse	5 x 20 mm 1,25 time lag	5 x 20 mm 2,5 time lag	5 x 20 mm 4,0 time lag	5 x 20 mm 6,3 time lag	6,3 x 32 mm 10 time lag	6,3 x 32 mm 12 time lag
Power	24 W	48 W	72 W	120 W	180 W	240 W
Permissible permanent output current	DC 1 A	DC 2 A	DC 3 A	DC 5 A	DC 7,5 A	DC 10 A
Residual ripple	< 5%					
Ambient temperature range	– 10 ° C/+ 60° C					
Output protection circuitry	Varistor					
General data						
Test voltage	between input and output circuit comp. to regulations (safety transformers)					
Directives	VDE 0570 part 2-6, EN 61558-2-6, EN 61000-3-2, EN 61131-2/part 2					
CE-mark	Yes					
Installation orientation	any position					
Type of connection	screw-type terminal, finger-safe comp. to VBG4					
Connection data	fine strand max. 2,5 mm^2					
Mounting	mounting rail (DIN EN 50 022), beginning with RNTU 120S additional screw-connection possible, in rows spaced > 8 mm					
	TS 35 x 7,5				TS 35 x 15	
Protection rating comp. VDE 0470 / EN 60529	IP 20					
Safety class comp. IEC 536 / VDE 0106 T1	prepared for protection class II					
Insulation class	E					
Dimensions in mm approx. Length L	77	77	82	134	157	157
Width W	62,5	62,5	90	125	175	175
Mounting depth D	122	122	128	153	185	185
Article no. AC 230 V/DC 12 V	223-024S	223-048S	223-072S	223-120S	223-180S	223-240S
Article no. AC 230 V/DC 24 V	224-024S	224-048S	224-072S	224-120S	224-180S	224-240S
Article no. AC 400 V/DC 24 V	226-024S	226-048S	226-072S	226-120S	226-180S	226-240S
Total weight in kg	0,95	1 ,20	2,35	3,9	5,2	6,3

Subject to technical modifications

Standard stock items

Single-phase compact power packs

RNTU 24S UL – 240S UL, certificate UL 508 / CSA 22.2 No. 14, non-regulated

Noise transmission EN 55011 class B (industry), EN 55022 class B (Telecom)

Series RNTU-UL provides efficient power packs featuring high reliability and compact measurements. Series RNTU-UL distinctly surpasses power pack requirements DIN EN 61131-2 / part 2 and guarantees safe operation without alterations even after the low voltage networks have converted pursuant to DIN IEC 38 from the year 2003 onwards. Brief dips in line voltage are bridged up to 10 ms by large-scale electrolytic capacitors.

Apart from the specifications listed below, series RNTU-UL can also be supplied in secondary voltages ranging from DC 10 V to DC 60 V and on request also with various primary voltages. However, indicated currents must not be exceeded.

Identical units can be connected in parallel up to max. 90% load per unit.

The integrated fuses (see table) exclusively deliver short circuit protection and guarantee safe operation even under worst-case conditions. Units are to be loaded only with rated current as indicated.
The enclosed construction of the space-saving power packs series RNTU-UL provides comprehensive protection against accidental contact. The power packs meet the safety requirements for protection against electric shock comp. to VDE 0106 part 101. The modules can be snapped onto DIN EN 50 022 mounting rails quickly and easily. From DC 5 A upwards there is additional provision for screw-fastening.

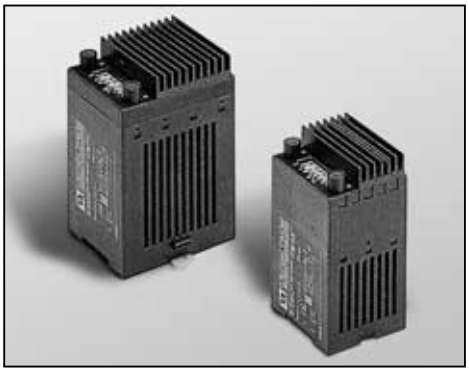

RNTU 72S UL, 24S UL

RNTU 240S UL, 120S UL

Technical data for model	RNTU 24 S UL	RNTU 72 S UL	RNTU 120 S UL	RNTU 180 S UL	RNTU 240 S UL
Input					
Mains input voltage	AC 230 V **and** AC 115 V (AC 240 V **and** AC 120 V)				
Mains input voltage range	+ 10 % to – 10 %				
Frequency	60 Hz				
Input fuses	5 x 20 mm 0,7 time lag	5 x 20 mm 1,6 time lag	5 x 20 mm 3,2 time lag	6,3 x 32 mm 4,0 time lag	6,3 x 32 mm 5,0 time lag
Output					
Output voltage EN 61131-2/part 2	DC 24 V				
Status display	green LED				
Output fuse	5 x 20 mm 1,25 A quick	5 x 20 mm 4,0 A quick	5 x 20 mm 6,3 A quick	6,3 x 32 mm 10 A m. time lag	6,3 x 32 mm 12 A m. time lag
Power	24 W	72 W	120 W	180 W	240 W
Permissible permanent output current	DC 1 A	DC 3 A	DC 5 A	DC 7,5 A	DC 10 A
Residual ripple	< 5%				
Ambient temperature range	– 10 ° C/+ 40° C				
Output protection circuitry	Varistor				
General data					
Test voltage	between input and output circuit comp. to regulations				
Directives	UL 508, CSA 22.2 No. 14, comp. to EN 61558-2-1, EN 61000-3-2, EN 61131-2/part 2				
Test mark	UL + CSA - File-No. E199951				
CE- mark	Yes				
Installation orientation	any position				
Type of connection	screw-type terminal, finger-safe comp. to VBG4				
Connection data	fine strand max. 2,5 mm^2				
Mounting	mounting rail (DIN EN 50 022), beginning with RNTU 120S UL, additional screw-connection possible, in rows spaced > 8 mm TS 35 x 7,5			TS 35 x 15	
Protection rating comp. VDE 0470 / EN 60529	IP 20				
Safety class comp. IEC 536 / VDE 0106 T1	I				
Insulation class	E				
Dimensions in mm approx. Length L	77	82	134	157	157
Width W	62,5	90	125	175	175
Mounting depth D	122	128	153	185	185
Article no.	0284-00024SUL	0284-00072SUL	0284-000120SUL	0284-000180SUL	0284-000240SUL
Copper weight in kg	0,12	0,36	0,6	0,97	1,18
Total weight in kg	0,95	2,35	3,9	5,2	6,3

Standard stock items

Subject to technical modifications

Single-phase compact power packs

Single-phase safety transformers

comp. VDE 0570 part 2-6, EN 61558-2-6

Noise transmission EN 55011 class B (industry), EN 55022 class B (Telecom)

RNTG 12S - 120S regulated

The enclosed construction of the compact and space-saving power packs series RNTG provides comprehensive protection against accidental contact. The power packs meet the safety requirements for protection against electric shock comp. to VDE 0106 part 101 and can be snapped onto DIN EN 50 022 mounting rail quickly and easily. RNTG120S / DC 5 A shows additional provision for screw-fastening.

Identical units can be connected in parallel up to max. 80% load per unit.

The integrated fuses (see table) exclusively deliver short circuit protection and guarantee safe operation even under worst-case conditions. Units are to be loaded only with rated current as indicated.

Series RNTG clearly surpasses the requirements for power packs stated in EN 61131-2 / part 2 and guarantees safe operation without alterations even after the low voltage networks have converted pursuant to DIN IEC 38 from the year 2003 onwards. Brief dips in line voltage are bridged up to 10 ms at rated duty.

Apart from the specifications listed below, series RNTG can also be supplied in various primary voltages up to max. AC 400 V and secondary voltages ranging from DC 5 V to DC 30 V at a surcharge. However, indicated currents must not be exceeded.

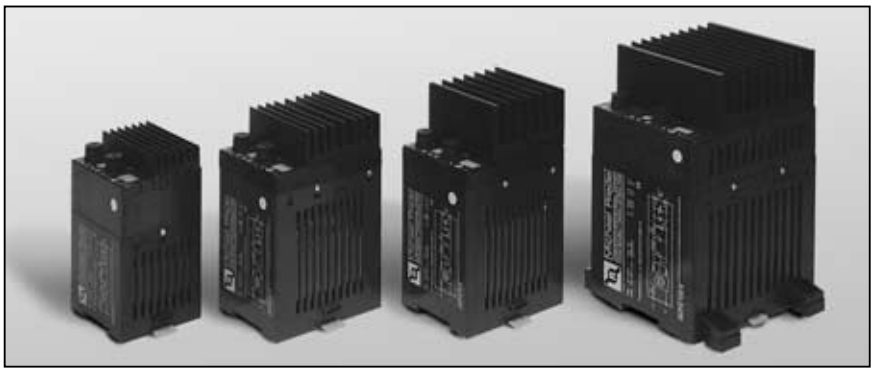

Technical data for model	RNTG 12 S	RNTG 24 S	RNTG 48 S	RNTG 72 S	RNTG 120 S
Input					
Mains input voltage	AC 230 V				
Mains input voltage range	+ 6 % to – 10 % comp. to DIN IEC 38				
Frequency	50 Hz/60 Hz				
Input fuses	5 x 20 mm 0,2 A time lag	5 x 20 mm 0,4 A time lag	5 x 20 mm 0,8 A time lag	5 x 20 mm 1,25 A time lag	5 x 20 mm 2,0 A time lag
Output					
Output voltage EN 61131-2/part 2	24 V DC, twin terminals, adjustable +/- 2 V				
Status display	green LED				
Output fuse	5 x 20 mm 0,7 A quick	5 x 20 mm 1,25 A quick	5 x 20 mm 2,5 A quick	5 x 20 mm 3,15 A quick	5 x 20 mm 5,0 A quick
Power	12 W	24 W	48 W	72 W	120 W
Permissible permanent current	0,5 A	1,0 A	2,0 A	3,0 A	5,0 A
Residual ripple	< 2 m V RMS				
Load stabilization	< 0,1 %				
Stability under constant conditions	< 0,1 %				
Ambient temperature	– 10 ° C/+ 40° C				
Output power reduction	at 40°C and above, > 1.5% / degree				
Output protection circuitry	Varistor				
General data					
Test voltage	between input and output circuit comp. to regulations (safety transformers)				
Directives	VDE 0570 part 2-6, EN 61558-2-6, EN 61000-3-2, EN 61131-2/part 2				
CE-mark	Yes				
Installation orientation	any position				
Type of connection	screw-type terminal, finger-safe comp. to VBG4				
Connection data	fine strand max. 2,5 mm^2				
Mounting	mounting rail (DIN EN 50022), RNTG 120S has additional screw-connection, in rows spaced > 8 mm				
Protection rating comp. VDE 0470 / EN 60529	IP 20				
Safety class comp. IEC 536 / VDE 0106 T1	prepared for protection class II				
Insulation class	E				
Dimensions in mm approx. Length L	77	77	82	82	134
Width W	62,5	62,5	90	90	125
Mounting depth D	122	122	138	153	178
Article no.	225-012S	225-024S	225-048S	225-072S	225-120S
Copper weight in kg	0,12	0,36	0,6	0,97	1,18
Total weight in kg	0,9	0,95	1,9	2,6	4,3

Subject to technical modifications

Standard stock items

Single-phase compact power packs

RNTG 12S UL – 120S UL, certificate UL 508 / CSA 22.2 No. 14, regulated

Noise transmission EN 55011 class B (industry), EN 55022 class B (Telecom)

Series RNTG-UL provides stabilized power packs showing high reliability and compact measurements. Series RNTG-UL distinctly surpasses power pack requirements EN 61131-2 / part 2 and guarantees safe operation without alterations even after the low voltage networks have converted pursuant to DIN IEC 38 from the year 2003 onwards. Brief dips in line voltage are bridged up to 10 ms.

Apart from the specifications listed below, series RNTG-UL can also be supplied in secondary voltages ranging from DC 5 V to DC 30 V and on request also with various primary voltages. However, indicated currents must not be exceeded.

Identical units can be connected in parallel up to max. 80% load per unit.

The integrated fuses (see table) exclusively deliver short circuit protection and guarantee safe operation even under worst-case conditions. Units are to be loaded only with rated current as indicated.
The enclosed construction of the space-saving power packs series RNTG-UL provides comprehensive protection against accidental contact. The power packs meet the safety requirements for protection against electric shock comp. to VDE 0106 part 101. The modules can be snapped onto DIN EN 50 022 mounting rails quickly and easily. RNTG120S UL / DC 5 A shows additional provision for screw-fastening.

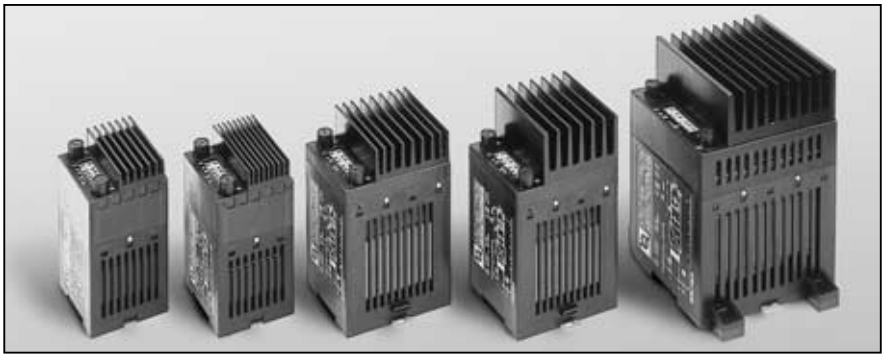

Technical data for model			RNTG 12 S UL	RNTG 24 S UL	RNTG 48 S UL	RNTG 72 S UL	RNTG 120 S UL
Input							
Mains input voltage			AC 230 V **and** AC 115 V (AC 240 V **and** AC 120 V)				
Mains input voltage range			+ 10 % to – 10 %				
Frequency			60 Hz				
Input fuses			5 x 20 mm 0,4 A time lag	5 x 20 mm 0,8 A time lag	5 x 20 mm 1,25 A time lag	5 x 20 mm 2,0 A time lag	5 x 20 mm 3,5 A time lag
Output							
Output voltage EN 61131-2/part 2			24 V DC, adjustable +/– 2 V				
Status display			green LED				
Output fuse			5 x 20 mm 0,7 A quick	5 x 20 mm 1,25 A quick	5 x 20 mm 2,5 A quick	5 x 20 mm 3,15 A quick	5 x 20 mm 5,0 A quick
Power			12 W	24 W	48 W	72 W	120 W
Permissible permanent current			0,5 A	1,0 A	2,0 A	3,0 A	5,0 A
Residual ripple			< 2 m V RMS				
Load stabilization			< 0,1 %				
Stability under constant conditions			< 0,1 %				
Ambient temperature			– 10 ° C/+ 40° C				
Output power reduction			ab 40° C, > 1,5 % / Grad				
Output protection circuitry			Varistor, inverse diode				
General data							
Test voltage			between input and output circuit comp. to regulations				
Directives			UL 508, CSA 22.2 No. 14, comp. EN 61558-2-1, EN 61000-3-2, EN 61131-2/part 2				
Test mark			UL + CSA - File-No. E199951				
CE-mark			Yes				
Installation orientation			any position				
Type of connection			screw-type terminal, finger-safe comp. to VBG4				
Connection data			fine strand max. 2,5 mm^2				
Mounting			mounting rail (DIN EN 50022), RNTG 120S UL shows additional screw-connection, in rows spaced >8mm				
Protection rating comp. VDE 0470 / EN 60529			IP 20				
Safety class comp. IEC 536 / VDE 0106 T1			prepared for safety class II				
Insulation class			E				
Dimensions in mm approx.	Length	L	77	77	82	82	134
	Width	W	62,5	62,5	90	90	125
	Mounting depth	D	122	122	138	153	178
Article no.			0285-00012SUL	0285-00024SUL	0285-00048SUL	0285-00072SUL	0285-000120SUL
Copper weight in kg			0,12	0,36	0,6	0,97	1,18
Total weight in kg			0,9	1,2	1,9	2,6	4,3

Standard stock items

Subject to technical modifications

Single-phase switch power packs

Single-phase safety transformers comp. VDE 0570 part 2-6, EN 61558-2-6

Noise transmission EN 55011 class B (industry), EN 55022 class B (Telecom)

RSNT 5 – 15S regulated

Our secondary switched power packs feature high stability and long service life. The patented switching concept ensures an extremely low interference level and therefore does not require any filtering or shielding whatsoever. The interference level distinctly remains below the permissible limits EN 55011 class B.. Consequently series RSNT excellently suits laboratory use also.
An internal electronic fuse ensures that the units always operate within safe operating range (SOA protection).
RSNT...S design: fully enclosed construction provides comprehensive protection against accidental contact; various primary voltages up to max. AC 400 V available at a surcharge.
RSNT version: Partially enclosed construction with sturdy mounting brackets; various primary voltages up to max. AC 690 V available at a surcharge.

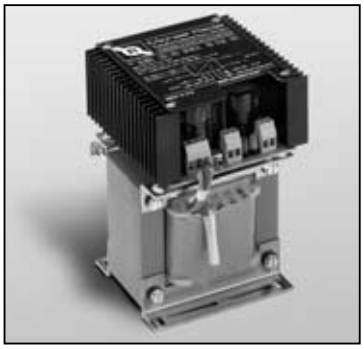

Technical data for model	RSNT 10S	RSNT 15S	RSNT 5	RSNT 10	RSNT 15
Input					
Mains input voltage	AC 230 V **or** AC 400V		AC 230V **and** AC 400V		
Mains input voltage range	+ 15 % to – 15 %				
Frequency	50 Hz/60 Hz				
Input fuses AC 230V AC 400V	5 x 20 mm 4,0 A time lag external	6,3 x 32 mm 6,3 A time lag external	external 4,0 Agl 2,0 Agl	external 4,0 Agl 2,0 Agl	external 6,0 Agl 4,0 Agl
Output					
Output voltage	DC 24 V stabilzed, twin terminals, adjustable 0...DC30V		DC 24 V stabilzed, twin terminals, adjustable 5...DC28V		
Status display	green / yellow LED (U / I)		green LED: constant voltage / red LED: error		
Adjustable output current	0...10 A	0...15 A	1...5 A	2...10 A	3...15 A
Residual ripple	< 30 mV RMS		< 50 mV RMS		
Short-circuit proofing	constant current operation		constant current operation / off after 3 s. switch back on with Reset-button		
Load stabilization dynamic	< 100 mVss / 500us.		< 300 mVss / 500us.		
Stability under constant conditions	< 0,05 %		< 0,1 %		
Mains stabilization	< 0,05 %				
Overtemperature protection	thermal switch-off when unit > 85°C				
Suppression grade	EN 55011 Klasse B				
Ambient temperature	-10... +40°C				
General data					
Transformer test voltage	between input and output circuit comp. to regulations (safety transformers)				
Directives	VDE 0570 part 2-6, EN 61558-2-6, EN 61000-3-2, EN 61131-2/part 2				
CE-mark	Yes				
Installation orientation	vertical on EN 50022 rail		any position		
Type of connection	screw-type terminal, finger-safe comp. to VBG4				
Connection data	fine strand max. 2,5 mm^2		fine strand max. 4 mm^2		
Mounting	on mounting rail, screw-fasten in addition		mounting brackets		
Protection rating comp. VDE 0470 / EN 60529	IP 20		IP 00		
Safety class comp. IEC 536 / VDE 0106 T1	I				
Insulation class	E				
Dimensions in mm approx. (L x W x D)	134 x 125 x 150	157 x 175 x 197	125 x 132 x 150	170 x 170 x 175	190 x 180 x 190
Mounting template in mm, approx.	87 x 120	130 x 154 x 154	84 x 71	90 x 84	104 x 97
Article no. AC 230V AC 400V	0219-00000010S 0319-00000010S	0219-00000015S 0319-00000015S	valid for both primary voltages 24-230-SNT-01	24-230-SNT-02	24-230-SNT-03
Copper weight in kg	0,75	1,2	0,6	1,2	1,4
Total weight in kg	5,0	9,2	5,5	6,5	7,5
Options					
Remote control 0 - 10V	for U / I	for U / I	-	-	for U
Remote control 4mA - 20mA	for U / I	for U / I	-	-	-
Switch-off input	yes	yes	-	-	yes
Signal contact "Ready"	yes	yes	-	-	yes

Subject to technical modifications

Standard stock items

Primary switched single-phase power packs

RPL 122.5 E – 4810 E comp. VDE 0570 part 2-17, EN 61558-2-17, EN 60950 class 1

Noise transmission EN 55011 class B (industry), EN 55022 class B (Telecom)

regulated

In General: Within the scope of European norms limit values for harmonic currents are defined and must be adhered to in all units: > 75 Watt and < 1000 Watt (EN 61 000-3-2). Units applied in systems possessing their own medium voltage transformers are exempted from this norm.
All power supplies marked PFC are fitted with harmonic filters when applied within the scope of the norm. The filter is active at mains input voltage range 184 V - 264 V.

Features:

- wide input voltage range for 30 W and 60 W units, 125 W and up input 230 VAC and/or 115 VAC
  30W units available in 85 up to 265VAC (type...E) or 195 up to 460VAC (type...E1)
- output voltage 12, 24 or 48 VDC, over a wide range adjustable
- connection in parallel or series
- high efficiency
- compact and robust design in metal housing, 30 W units in plastic enclosure
- easy installation on DIN mounting rail, alternative screw fastening
- safety class I
- interference emission EN 55011 class B **(industry)**, EN 55022 class B **(Telecom)**
- interference immunity EN 50082-2: ESD, electromagnetic irradiation, burst, conducted interference immunity, mains voltage dips
- excess current limiter, short-circuit protection, overvoltage limitation and overtemperature protection
- inrush current limiter
- status display: LED
- all power packs series RPL can be also delivered as battery chargers (type ...EL)
- power packs **30 W**, **60 W** and **480 W** can be applied without alterations as **D.C./D.C.-converters**

Chart:

Power	Voltage/Current	Type wide voltage range	Type input 230/115VAC	Type input 230VAC	Type input 115VAC	Article.-no.	Norm EN 61000-3-2 met
30 W (AC 85-265V)	DC 12V / 2.5A	RPL 122.5 E				0500-00122.5E	Norm does not apply
	DC 24V / 1.25A	RPL 241.25 E				0500-0241.25E	Norm does not apply
	DC 48V / 0.65A	RPL 480.65 E				0500-0480.65E	Norm does not apply
30 W (AC 195-460V)	DC 12V / 2.5A	RPL 122.5 E1				0500-0122.5E1	Norm does not apply
	DC 24V / 1.25A	RPL 241.25 E1				0500-241.25E1	Norm does not apply
	DC 48V / 0.65A	RPL 480.65 E1				0500-480.65E1	Norm does not apply
60 W	DC 12V / 5A	RPL 1205 E				0500-0001205E	Norm does not apply
	DC 24V / 2.5A	RPL 242.5 E				0500-00242.5E	Norm does not apply
	DC 48V / 1.25A	RPL 481.25 E				0500-0481.25E	Norm does not apply
125 W	DC 12V / 10A		RPL 1210 E			0500-0001210E	yes
	DC 24V / 5A		RPL 2405 E			0500-0002405E	yes
	DC 48V / 2.5A		RPL 482.5 E			0500-00482.5E	yes
250W	DC 12V / 20A		RPL 1220 E			0500-0001220E	no
	DC 24V / 10A		RPL 2410 E			0500-0002410E	no
	DC 48V / 5A		RPL 4805 E			0500-0004805E	no
250W	DC 12V / 20A		RPL 1220 PFC			0500-0001220P	yes
	DC 24V / 10A		RPL 2410 PFC			0500-0002410P	yes
	DC 48V / 5A		RPL 4805 PFC			0500-0004805P	yes
480W	DC 24V / 20A			RPL 2420 E		0500-0002420E	no
	DC 48V / 10A			RPL 4810 E		0500-0004810E	no
	DC 24V / 20A				RPL 2420 E1	0500-002420E1	no
	DC 48V / 10A				RPL 4810 E1	0500-004810E1	no
480W	DC 24V / 20A			RPL 2420 PFC		0500-0002420P	yes
	DC 48V / 10A			RPL 4810 PFC		0500-0004810P	yes

Options:

- differing input- and output voltages possible
- units of lesser power, suitable also for application in telecom
- units with multiple output voltages
- overload and short circuit behavior can be realized to customer's requirements

Standard Stock items

Subject to technical modifications

Primary switched single-phase power packs

RPL 122.5 E – 480.65 E1 comp. VDE 0570 part 2-17, EN 61558-2-17, EN 60950 class 1

Noise transmission EN 55011 class B (industry), EN 55022 class B (Telecom)

regulated

application as D.C./D.C.-converter possible

Technical data for model class	**30W**			**30W**		
Model	**RPL 12 2.5 E**	**RPL 24 1.25 E**	**RPL 48 0.65 E**	**RPL 12 2.5 E1**	**RPL 24 1.25 E1**	**RPL 48 0.65 E1**
INPUT						
Rated input voltage, U1 rated	AC 100V - 240V			AC 220V - 400V		
Voltage range, U1min - U1max	AC 85V - 265V or DC 100V - 375V			AC 195V - 460V or DC 230V - 650V		
Frequency	45-65 Hz			45-65 Hz		
Overvoltage protection	varistor AC 275V			varistor AC 460V		
Rated current typical, I1 rated	0,32A at 230VAC ; 0,61A at 115VAC			0,32A at 230VAC ; 0,19A at 400VAC		
Maximum transient pulse Ta = 25°C	< 25A at 230VAC ; < 13A at 115VAC			< 25A at 230VAC ; < 35A at 400VAC		
Maximum transient pulse Ta = 55°C	< 50A at 230VAC ; < 26A at 115VAC			< 50A at 230VAC ; < 60A at 400VAC		
Internal fuse	T1.25A with high switch-off ability			-		
Recommended external fuse	power circuit breaker C6, B10			power circuit breaker C6, B10		
Maximum switching rate	30 switching cycles per hour			30 switching cycles per hour		
Bypass power-line failure	> 50ms at 230VAC ; > 10ms at 115VAC			> 10ms at 230VAC ; > 20ms at 400VAC		
Reverse polarity protection D.C.-input	yes			yes		
OUTPUT						
Rated voltage U2 rated D.C.	DC 12V	DC 24V	DC 48V	DC 12V	DC 24V	DC 48V
Voltage range U2 min - U2 max D.C.	10-15V	23-29V	45-58V	10-15V	23-29V	45-58V
Rated current I2 (at U2 rated)	2.5A	1.25A	0.65A	2.5A	1.25A	0.65A
Protection overload, short circuit, no-load	yes			yes		
Overcurrent limit typical	2.6A	1.3A	0.7A	2.6A	1.3A	0.7A
Short circuit current typical	< 5A	< 3A	< 2A	< 5A	< 3A	< 2A
Overvoltage protection	yes			yes		
Residual ripple f=20Hz...300kHz, Ta=25°C	< 10mV RMS			< 10mV RMS		
Mains stabilization U1 min - U1 max	< 0,1 %			< 0,1 %		
Load stabilization load alteration 10% <-> 90%	< 0,5 %			< 0,5 %		
Overshoot/control time load leap 10% <-> 90%"	< 3.0% < 3ms			< 3.0% < 3ms		
Temp. stability	< 0.03% / K			< 0.03% / K		
Operation in parallel and series	yes			yes		
Status reports	LED green			LED green		
DIRECTIVES						
Mains harmonics limit EN 61000-3-2	not necessary			not necessary		
Interference emission	EN 50081-1, EN 55011 class B, EN 55022 class B			EN 50081-1, EN 55011 class B, EN 55022 class B		
Interference immunity	EN 50082-2			EN 50082-2		
Safety	EN 60950 class I			EN 60950 class I		
Test voltage input/housing	-			-		
Test voltage input/output	3000VAC RMS 50Hz, 1min			3000VAC RMS 50Hz, 1min		
Test voltage output/housing	-			-		
Humidity	85% RH IEC 68-2-30			85% RH IEC 68-2-30		
Vibration and shock	ETS 300 019-2-4, class 4M5			ETS 300 019-2-4, class 4M5		
CE mark	yes			yes		
OPERATING DETAILS						
Efficiency typical	> 80%	> 82%	> 82%	> 80%	> 82%	> 82%
Protection rating comp. VDE 0470 / EN 60529	IP 20			IP 20		
Protection class comp. IEC 536, VDE 0106 T1	I			I		
Overtemperature protection	yes			yes		
Ambient temperature	0°C up to +55°C			-20°C up to +55°C		
Storage temperature	-40°C up to +85°C			-40°C up to +85°C		
Cooling	free convection			free convection		
MECHANICS						
Connection input voltage	connector RM7,62mm to screw 3-pole 0,75-2,5mm² (L1-N-PE) **for D.C./D.C.-converter: + on L1, - on N**			connector RM7,62mm to screw 3-pole 0,75-2,5mm² (L1-N-PE) **for D.C./D.C.-converter: + on L1, - on N**		
Connection output voltage	connector RM5,08mm to screw 2-pole 0,75-2,5mm² (+ -)			connector RM5,08mm to screw 2-pole 0,75-2,5mm² (+ -)		
Housing design	plastic			plastic		
Mounting	snap-on onto mounting rail DIN EN 50022			snap-on onto mounting rail DIN EN 50022		
Installation orientation	vertical			vertical		
Approx. dimensions (W x H x D)	40 x 80 x 85 mm			40 x 80 x 85 mm		
Approx. total weight	0,14kg			0,14kg		

Primary switched single-phase power packs

RPL 1205 E – 482.5 E comp. VDE 0570 part 2-17, EN 61558-2-17, EN 60950 class 1

Noise transmission EN 55011 class B (industry), EN 55022 class B (Telecom)

regulated

60W units applicable as D.C./D.C.-converters

Technical data for model class	60W			125W		
Model	**RPL 12 05 E**	**RPL 24 2.5 E**	**RPL 48 1.25 E**	**RPL 12 10 E**	**RPL 24 05 E**	**RPL 48 2.5 E**
INPUT						
Rated input voltage, U1 rated	AC 100V - 240V			AC 115V and AC 230V		
Voltage range, U1min - U1max	AC 90 - 264V or DC 120V - 375V			AC 94 - 132V or AC 184 - 264V		
Frequency	45-65 Hz			45-65 Hz		
Overvoltage protection	varistor AC 275V			varistor AC 275V		
Rated current typical, I1 rated	0.7 A at 230VAC ; 1.2A at 115VAC			1,3A at 230VAC ; 2,2A at 115VAC		
Maximum transient pulse Ta = 25°C	< 25A at 230VAC ; < 12A at 115VAC			< 45A at 230VAC ; < 22A at 115VAC		
Maximum transient pulse Ta = 55°C	< 55A at 230VAC ; < 29A at 115VAC			< 85A at 230VAC ; < 43A at 115VAC		
Internal fuse	T2.0A with high switch-off ability			T6.3A with high switch-off ability		
Recommended external fuse	power circuit breaker C6, B10			power circuit breaker B10, B16		
Maximum switching rate	30 switching cycles per hour			30 switching cycles per hour		
Bypass power-line failure	> 50ms at 230VAC ; > 10ms at 115VAC			> 20ms		
Reverse polarity protection D.C.-input	yes			-		
OUTPUT						
Rated voltage U2 rated D.C.	DC 12V	DC 24V	DC 48V	DC 12V	DC 24V	DC 48V
Voltage range U2 min - U2 max D.C.	10,5-15V	21-29V	45-58V	9-15V	21-29V	45-58V
Rated current I2 (at U2 rated)	5.0A	2.5A	1.25A	10A	5A	2.5A
Protection overload, short circuit, no-load	yes			yes		
Overcurrent limit typical	< 8A	< 4A	< 2A	< 11A	< 6A	< 3A
Short circuit current typical	< 12A	< 9A	< 6A	< 16A	< 10A	< 6A
Overvoltage protection	yes			yes		
Residual ripple f=20Hz...300kHz, Ta=25°C	< 15mV RMS	< 10mV RMS		< 15mV RMS	< 10mV RMS	
Mains stabilization U1 min - U1 max	< 0,15 %			< 0,15 %		
Load stabilization load alteration 10% <-> 90%	< 1,0 %	< 0,5 %		< 1,0 %	< 0,5 %	
Overshoot/control time load leap 10% <-> 90%"	< 3.0% < 3ms			< 3.0% < 3ms		
Temp. stability	< 0.02% / K			< 0.02% / K		
Operation in parallel and series	series operation yes. For parallel operation extern series diode necessary			yes		
Statusmeldungen	LED - green			LED - green		
Noise output zero potential change-over contact	yes			yes		
Temperature compensation (battery charger) external NTC-resistor	2,2kΩ-NTC (f.example Siemens B57045K222K)			2,2kΩ-NTC (f.example Siemens B57045K222K)		
DIRECTIVES						
Mains harmonics limit EN 61000-3-2	not necessary			yes		
Interference emission	EN 50081-1, EN 55011 class B, EN 55022 class B			EN 50081-1, EN 55011 class B, EN 55022 class B		
Interference immunity	EN 50082-2			EN 50082-2		
Safety	EN 60950 class I			EN 60950 class 1		
Test voltage input/housing	1500VAC RMS 50Hz, 1min			1500VAC RMS 50Hz, 1min		
Test voltage input/output	3000VAC RMS 50Hz, 1min			3000VAC RMS 50Hz, 1min		
Test voltage output/housing	500VDC			500VDC		
Humidity	85% RH IEC 68-2-30			85% RH IEC 68-2-30		
Vibration and shock	ETS 300 019-2-4, class 4M5			ETS 300 019-2-4, class 4M5		
CE mark	yes			yes		
OPERATING DETAILS						
Efficiency typical	> 82%	> 83%	> 84%	> 85%	> 88%	> 89%
Protection rating comp. VDE 0470 / EN 60529	IP 20			IP 20		
Protection class comp. IEC 536, VDE 0106 T1	I			I		
Overtemperature protection	yes			yes		
Ambient temperature	-40°C up to +55°C			-40°C up to +55°C		
Storage temperature	-40°C up to +85°C			-40°C up to +85°C		
Cooling	free convection			free convection		
MECHANICS						
Connection input voltage	connector RM7,62mm to screw 3-pole 0,75-2,5mm2 (L1-N-PE) **for D.C./D.C.-converter: + on L1, - on N**			connector RM7,62mm to screw 3-pole 0,75-2,5mm² (L1-N-PE)		
Connection output voltage	connector RM5,08mm to screw 2-pole 0,75-2,5mm² (+ -)			connector RM5,08mm to screw 2-pole 0,75-2,5mm² (+ -)		
Connection noise output temperature compensation	connector RM5,08mm to screw 5-pole 0,75-2,5mm² (COM-NO-NC-1-2)			connector RM5,08mm to screw 5-pole 0,75-2,5mm² (COM-NO-NC-1-2)		
Housing design	aluminum / steel			aluminum / steel		
Mounting	snap-on onto mounting rail DIN EN 50022			snap-on onto mounting rail DIN EN 50022		
Installation orientation	vertical			any position		
Approx. dimensions (W x H x D)	51 x 121 x 81 mm			66 x 148 x 113 mm		
Approx. total weight	0,36kg			0,84kg		

Standard stock items

Subject to technical modifications

Primary switched single-phase power packs

RPL 1220 PFC – 4810 PFC comp. VDE 0570 part 2-17, EN 61558-2-17, EN 60950 class 1

Noise transmission EN 55011 class B (industry), EN 55022 class B (Telecom)

regulated

480W units applicable as D.C./D.C.-converters

Technical data for model class	**250W**			**480W**	
Model	**RPL 12 20 PFC**	**RPL 24 10 PFC**	**RPL 48 0.5 PFC**	**RPL 24 20 PFC**	**RPL 48 10 PFC**
INPUT					
Rated input voltage, U1 rated	AC 115V and AC 230V			AC 230V	
Voltage range, U1min - U1max	AC 94 - 132V or AC 184 - 264V			AC 196-264V or DC 270V-375V	
Frequency	45-65 Hz			45-65 Hz	
Overvoltage protection	varistor AC 275V			varistor AC 275V	
Rated current typical, I1 rated	1,9A at 230VAC ; 4,2A at 115VAC			3,1A at 230VAC	
Maximum transient pulse Ta = 25°C	< 35A at 230VAC ; < 17A at 115VAC			< 11A at 230VAC	
Maximum transient pulse Ta = 55°C	< 69A at 230VAC ; < 33A at 115VAC			< 30A at 230VAC	
Internal fuse	T6,3A with high switch-off ability			T6,3A with high switch-off ability	
Recommended external fuse	power circuit breaker B10, B16			power circuit breaker B10, B16	
Maximum switching rate	30 switching cycles per hour			30 switching cycles per hour	
Bypass power-line failure	> 20ms			> 30ms	
Reverse polarity protection D.C.-input	-			yes	
OUTPUT					
Rated voltage U2 rated D.C.	DC 12V	DC 24V	DC 48V	DC 24V	DC 48V
Voltage range U2 min - U2 max D.C.	9-15V	21-29V	45-58V	23-29V	45-58V
Rated current I2 (at U2 rated)	20A	10A	5A	20A	10A
Protection overload, short circuit, no-load	yes			yes	
Overcurrent limit typical	< 22A	< 11A	< 6A	20,5A	11A
Short circuit current typical	< 27A	< 14A	< 7A	< 22A	< 12A
Overvoltage protection	yes			yes	
Residual ripple f=20Hz...300kHz, Ta=25°C	< 15mV RMS	< 10mV RMS		< 60mV RMS	
Mains stabilization U1 min - U1 max	< 0,15 %			< 0,05 %	< 0,05 %
Load stabilization load alteration 10% <-> 90%	< 1,0 %	< 0,5 %		< 0,25 %	
Overshoot/control time load leap 10% <-> 90%"	< 3.0% < 3ms			< 3.0% < 3ms	
Temp. stability	< 0.02% / K			< 0.02% / K	
Operation in parallel and series	yes			yes	
Status reports	LED green			LED green	
Noise output zero potential change-over contact	yes			no	
Temperature compensation (battery charger) external NTC-resistor	2,2kΩ-NTC (f. example Siemens B57045K222K)			-	
DIRECTIVES					
Mains harmonics limit EN 61000-3-2	yes			yes	
Interference emission	EN 50081-1, EN 55011 class B, EN 55022 class B			EN 50081-1, EN 55011 class B, EN 55022 class B	
Interference immunity	EN 50082-2			EN 50082-2	
Safety	EN 60950 class I			EN 60950 class I	
Test voltage input/housing	1500VAC RMS 50Hz, 1min			1500VAC RMS 50Hz, 1min	
Test voltage input/output	3000VAC RMS 50Hz, 1min			3000VAC RMS 50Hz, 1min	
Test voltage output/housing	500VDC			500VDC	
Humidity	85% RH IEC 68-2-30			85% RH IEC 68-2-30	
Vibration and shock	ETS 300 019-2-4, class 4M5			ETS 300 019-2-4, class 4M5	
CE mark	yes			yes	
OPERATING DETAILS					
Efficiency typical	> 85%	> 89%	> 90%	> 92%	
Protection rating comp. VDE 0470 / EN 60529	IP 20			IP 20	
Protection class comp. IEC 536, VDE 0106 T1	I			I	
Overtemperature protection	yes			yes	
Ambient temperature	-40°C up to +55°C			0°C up to +55°C	
Storage temperature	-40°C up to +85°C			-40°C up to +85°C	
Cooling	free convection			free convection	
MECHANICS					
Connection input voltage	connector RM7,62mm to screw 3-pole 0,75-2,5mm² (L1-N-PE)			connector RM7,62mm to screw 3-pole 0,75-2,5mm² (L1-N-PE) **for D.C./D.C.-converter: + on L1, - on N**	
Connection output voltage	connector RM5,08mm to screw 4-pole 0,75-2,5mm² (++ --)			connector RM5,08mm to screw 4-pole 0,75-4,0mm² (++ --)	
Connection noise output temperature compensation	connector RM5,08mm to screw 5-pole 0,75-2,5mm² (COM-NO-NC-1-2)			-	
Housing design	aluminum / steel			aluminum / steel	
Mounting	snap-on onto mounting rail DIN EN 50022			snap-on onto mounting rail DIN EN 50022	
Installation orientation	any position			front plate horizontal, connections below	
Approx. dimensions (W x H x D)	75 x 173 x 122 mm			245 x 138 x 100 mm	
Approx. total weight	1,5kg			2,4kg	

Subject to technical modifications

Standard stock items

Primary switched single-phase power packs

RPL 1220 E – 4810 E1 comp. VDE 0570 part 2-17, EN 61558-2-17, EN 60950 class 1

Noise transmission EN 55011 class B (industry), EN 55022 class B (Telecom)

regulated **480W * units applicable as D.C./D.C.-converters**

Technical data for model class	**250W**			**480W**			
Model	**RPL 12 20 E**	**RPL 24 10 E**	**RPL 48 0.5 E**	**RPL 24 20 E ***	**RPL 48 10 E ***	**RPL 24 20 E1**	**RPL 48 10 E1**
INPUT							
Rated input voltage, U1 rated	AC 115V and AC 230V			AC 230V		AC 115V	
Voltage range, U1min - U1max	AC 94 - 132V or AC 184 - 264V			AC 196-264V / DC 270V-375V		AC 93-132V	
Frequency	45-65 Hz			45-65 Hz			
Overvoltage protection	varistor AC 275V			varistor AC 275V		varistor AC 150V	
Rated current typical, I1 rated	2,5A at 230VAC ; 4,2A at 115VAC			3,6A at 230VAC		5,6A at 115VAC	
Maximum transient pulse Ta = 25°C	< 35A at 230VAC ; < 17A at 115VAC			< 11A at 230VAC		< 11A at 115VAC	
Maximum transient pulse Ta = 55°C	< 69A at 230VAC ; < 33A at 115VAC			< 30A at 230VAC		< 30A at 115VAC	
Internal fuse	T6,3A with high switch-off ability			T6,3A with high switch-off ability			
Recommended external fuse	power circuit breaker B10, B16			power circuit breaker B10, B16			
Maximum switching rate	30 switching cycles per hour			30 switching cycles per hour			
Bypass power-line failure	> 20ms			> 40ms at 230VAC		> 40ms at 115VAC	
Reverse polarity protection D.C.-input	-			yes			
OUTPUT							
Rated voltage U2 rated D.C.	DC 12V	DC 24V	DC 48V	24V	48V	24V	48V
Voltage range U2 min - U2 max D.C.	9-15V	21-29V	45-58V	23-29V	45-58V	23-29V	45-58V
Rated current I2 (at U2 rated)	20A	10A	5A	20.0A	10.0A	20.0A	10.0A
Protection overload, short circuit, no-load	yes			yes			
Overcurrent limit typical	< 22A	< 11A	< 6A	20.5A	11.0A	20.5A	11.0A
Short circuit current typical	< 27A	< 14A	< 7A	< 22A	< 12A	< 22A	< 12A
Overvoltage protection	yes			yes			
Residual ripple f=20Hz...300kHz, Ta=25°C	< 15mV RMS	< 10mV RMS		< 60mV RMS			
Mains stabilization U1 min - U1 max	< 0,15 %			< 0,05 %			
Load stabilization load alteration 10% <-> 90%	< 1,0 %	< 0,5 %		< 0,25%			
Overshoot/control time load leap 10% <-> 90%"	< 3.0% < 3ms			< 3.0% < 3ms			
Temp. stability	< 0.02% / K			< 0,02% / K			
Operation in parallel and series	yes			yes			
Status reports	LED green			LED green			
Noise output zero potential change-over contact	yes			-			
Temperature compensation (battery charger) external NTC-resistor	2,2kΩ-NTC (f. example Siemens B57045K222K)			-			
DIRECTIVES							
Mains harmonics limit EN 61000-3-2	no			no		not necessary	
Interference emission	EN 50081-1, EN 55011 class B, EN 55022 class B			EN 50081-1, EN 55011 class B, EN 55022 class B			
Interference immunity	EN 50082-2			EN 50082-2			
Safety	EN 60950 class I			EN 60950 class I			
Test mark / approbation	-	cUL	-	-			
Test voltage input/housing	1500VAC RMS 50Hz, 1min			1500VAC RMS 50Hz, 1min			
Test voltage input/output	3000VAC RMS 50Hz, 1min			3000VAC RMS 50Hz, 1min			
Test voltage output/housing	500VDC			500VDC			
Humidity	85% RH IEC 68-2-30			85% RH IEC 68-2-30			
Vibration and shock	ETS 300 019-2-4, class 4M5			ETS 300 019-2-4, class 4M5			
CE mark	no			no		not necessary	
OPERATING DETAILS							
Efficiency typical	> 85%	> 89%	> 90%	> 92%			
Protection rating comp. VDE 0470 / EN 60529	IP 20			IP 20			
Protection class comp. IEC 536, VDE 0106 T1	I			I			
Overtemperature protection	yes			yes			
Ambient temperature	-40°C up to +55°C			0 up to +55°C			
Storage temperature	-40°C up to +85°C			-40°C up to +85°C			
Cooling	free convection			free convection			
MECHANICS							
Connection input voltage	connector RM7,62mm to screw 3-pole 0,75-2,5mm² (L1-N-PE)			connector RM7,62mm to screw 3-pole 0,75-2,5mm² (L1-N-PE) **for D.C./D.C.-converter: + on L1, - on N**			
Connection output voltage	connector RM5,08mm to screw 4-pole 0,75-2,5mm² (+ -)			connector RM7,62mm to screw 4-pole 0,75-4,0mm² (+ + - -)			
Connection noise output temperature compensation	connector RM5,08mm to screw 5-pole 0,75-2,5mm² (COM-NO-NC-1-2)			-			
Housing design	aluminum / steel			aluminum / steel			
Mounting	snap-on onto mounting rail DIN EN 50022			snap-on onto mounting rail DIN EN 50022			
Installation orientation	any position			front plate horizontal, connections below			
Approx. dimensions (W x H x D)	75 x 173 x 122 mm			245 x 138 x 100 mm			
Approx. total weight	1,3kg			2,0kg			

Single-phase IU battery chargers

RLG 1203S – 2415S comp. to VDE 0570 part 2-6, EN 61558-2-6

The battery chargers series RLG..S charge maintenance-free lead acid batteries swiftly and gently using IU characteristic.

An internal electronic regulation ensures that units always work within safe operating range (SOA protection), thereby enabling permanent operation without maintenance.

A two-color LED indicates charging state.

Buffer-battery system is fully guaranteed, i.e. energy can also be drawn during mains connection. The reverse current is <=1mA during switch off condition.

Battery chargers RLG 1205S to RLG 2415S feature IUoU charging characteristic, which charges a battery with constant current to just below gaseous voltage. Then this output voltage is maintained (see diagram) for a factory-set period of time. At the end of this period the constant voltage is reduced to trickle voltage. An additional LED (yellow) lights up when unit reduces the output voltage to trickle voltage thereby indicating that charging procedure is completed.

Such a characteristic charges lead acid batteries optimally, resulting in high capacity while treating the connected battery gently and preventing sulphate build-up.

The battery chargers are installed in compact plastic enclosures ensuring full protection against accidental contact. They meet requirements VDE 0106 part 101 for protection against electric shock.

The enclosure is designed for quick and simple mounting on DIN EN 50022 mounting rails.

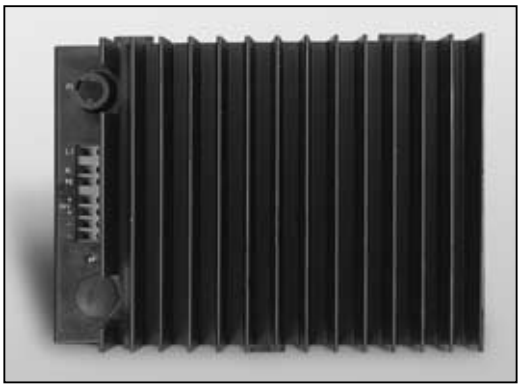

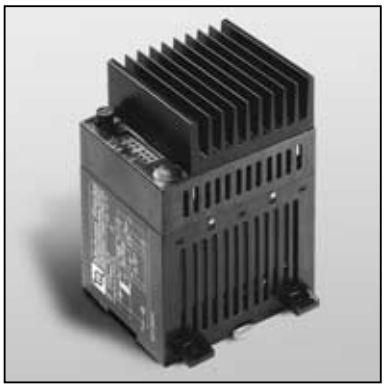

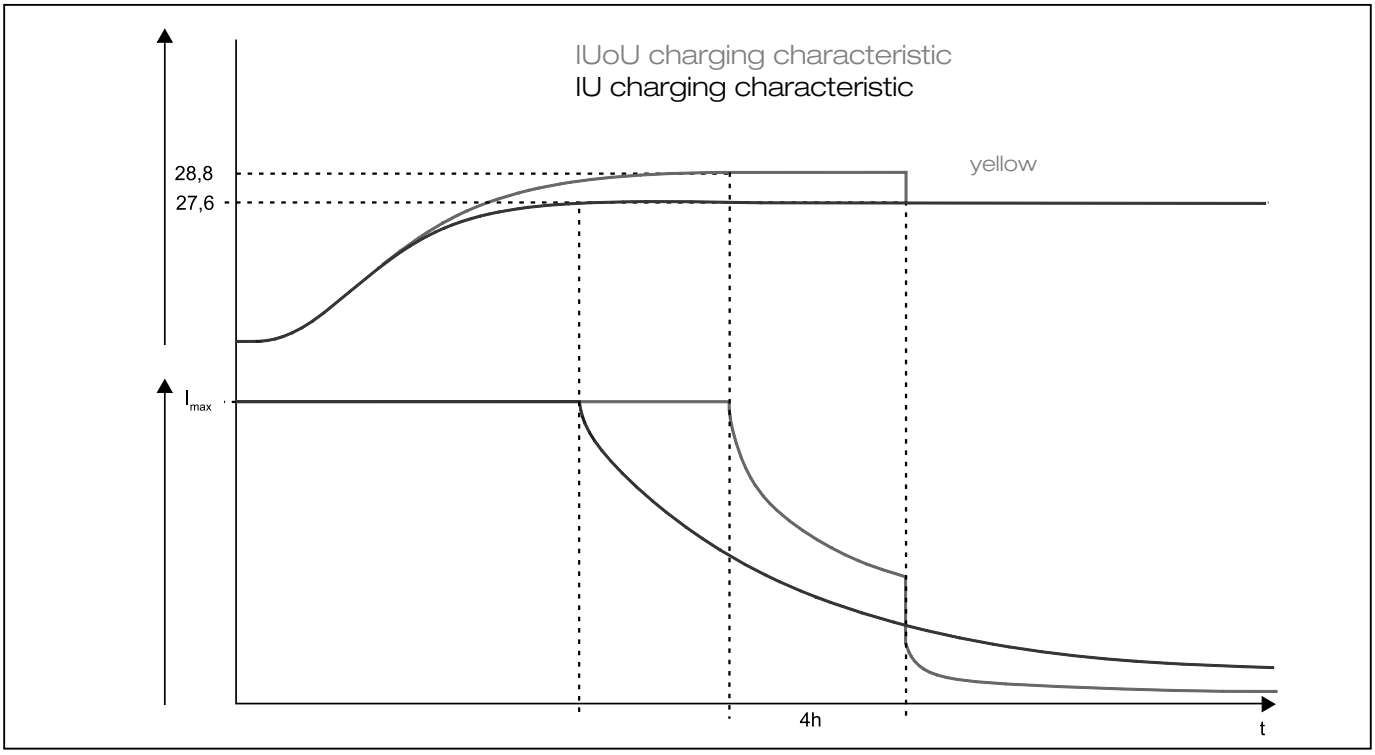

Single-phase IU battery chargers

RLG 1203S – 2415S comp. VDE 0570 part 2-6, EN 61558-2-6

Technical data for model	RLG 1203S RLG 2403S	RLG 1205S RLG 2405S	RLG 1208S -	RLG 1210S RLG 2410S	RLG 1215S RLG 2415S
Input					
Mains input voltage	AC 230 V **or** AC 400V				
Mains input voltage range	+ 6 % up to – 10 % comp. to IEC 38			+- 15%	
Frequency	50 Hz/60 Hz				
Input fuses	5 x 20 mm	5 x 20 mm	5 x 20 mm	5 x 20 mm	6,3 x 32 mm
AC 230V / DC 12V	0,80 A time lag	1,25 A time lag	2,0 A time lag	2,0 A time lag	4,0 A time lag
AC 230V / DC 24V	1,25 A time lag	2,50 A time lag	-	4,0 A time lag	6,3 A time lag
AC 400V / DC 12V	external	external	external	external	external
AC 400V / DC 24V	external	external	-	external	external
Output					
Rated battery voltage	DC 12 V DC 24 V	DC 12 V DC 24 V	DC 12 V -	DC 12 V DC 24 V	DC 12 V DC 24 V
Max. charge current	DC 3 A	DC 5 A	DC 8 A	DC 10 A	DC 15 A
Battery type	lead acid batteries				
Status display two-colour LED	red: charging green: $I < 10\% I_N$	red: charging green: $I < 10\% I_N$		yellow: constant current green: constant voltage	
yellow LED	-	maintaining charge		maintaining charge	
Residual ripple of charge voltage	< 0,5%				
Charging characteristic	IU	IUoU; preset time 4 h			
Overload protection	internal electronic current limiter				
Reverse current	when mains off, I = < 1 mA				
Reverse polarity protection	integrated (reverse polarity current < 1 mA)				
Overtemperature protection	automatic cut-off if charger temperature > 85°C				
RFI suppression	better than EN 55011 class B				
Ambient temperature range	0... +40°C				
General data					
Transformer test voltage	between input- and output circuit comp. to regulation (safety transformer)				
Directives	VDE 0570 part 2-6, EN 61558-2-6, EN 61000-3-2, EN 61131-2/part 2				
CE-mark	yes				
Installation orientation	vertical				
Cooling	convection				
Type of connection	P.C. terminals				
Connection data	fine strand max. 2,5 mm^2				
Mounting	on mounting rail (DIN EN 50022) spacing > 8 mm			on mounting rail screw-fasten additionally	
Protection rating comp. VDE 0470 / EN 60529	IP 20				
Protection class comp. IEC 536 / VDE 0106 T1	prepared for protection class II				
Insulation class	E				
Approx. dimensions in mm length L	82	134			157
width W	90	125			175
depth D	135	175			210
Mounting template in mm, approx.	-	87 x 120			130 x 154 x 154
Article no. AC 230V / DC 12 V	0235-0001203S	0235-0001205S	0235-0001208S	0235-0001210S	0235-0001215S
AC 230V / DC 24 V	0235-0002403S	0235-0002405S	-	0235-0002410S	0235-0002415S
AC 400V / DC 12 V	0245-0001203S	0245-0001205S	0245-0001208S	0245-0001210S	0245-0001215S
AC 400V / DC 24 V	0245-0002403S	0245-0002405S	-	0245-0002410S	0245-0002415S
Copper weight in kg	0,97	1,18	1,18	1,18	1,30
Total weight in kg	2,50	4,30	4,30	4,50	6,60

Primary switched single-phase battery chargers

RPL 122.5 EL – 4810 EL comp. VDE 0570 part 2-17, EN 61558-2-17, EN 60950 class 1

Noise transmission EN 55011 class B (industry), EN 55022 class B (Telecom)

regulated

In General: Within the scope of European norms limit values for harmonic currents are defined and must be adhered to in all units: > 75 Watt and < 1000 Watt (EN 61 000-3-2). Units applied in systems possessing their own medium voltage transformers are exempted from this norm.
All battery chargers marked PFC are fitted with harmonic filters when applied within the scope of the norm. The filter is active at mains input voltage range 184 V - 264 V.

Features:

- wide input voltage range for 30 W and 60 W units, 125 W and up input 230 VAC and/or 115 VAC
  30W units available in 85 up to 265VAC (type...EL) or 195 up to 460VAC (type...E1L)
- output voltage 13,7, 27,4 or 54,8 VDC, over a wide range adjustable
- connection in parallel or series
- high efficiency
- compact and robust design in metal housing, 30 W units in plastic enclosure
- easy installation on DIN mounting rail, alternative screw fastening
- safety class I
- interference emission EN 55011 class B **(industry)**, EN 55022 class B **(Telecom)**
- interference immunity EN 50082-2: ESD, electromagnetic irradiation, burst, conducted interference immunity, mains voltage dips
- excess current limiter, short-circuit protection, overvoltage limitation and overtemperature protection
- inrush current limiter
- status display: LED
- all battery chargers series RPL can be also delivered as power supplies (type ...E)
- battery chargers **30 W**, **60 W** and **480 W** can be applied without alterations as **D.C./D.C.-converters**

Chart:

Power	Voltage/Current	Type wide voltage range	Type input 230/115VAC	Type input 230VAC	Type input 115VAC	Article.-no.	Norm EN 61000-3-2 met
30 W (AC 85-265V)	DC 13,7V / 2.5A	RPL 122.5 EL				0520-0122.5EL	Norm does not apply
	DC 27,4V / 1.25A	RPL 241.25 EL				0520-241.25EL	Norm does not apply
	DC 54,8V / 0.65A	RPL 480.65 EL				0520-480.65EL	Norm does not apply
30 W (AC 195-460V)	DC 13,7V / 2.5A	RPL 122.5 E1L				0520-0122.5E1	Norm does not apply
	DC 27,4V / 1.25A	RPL 241.25 E1L				0520-241.25E1	Norm does not apply
	DC 54,8V / 0.65A	RPL 480.65 E1L				0520-480.65E1	Norm does not apply
60 W	DC 13,7V / 5A	RPL 1205 EL				0520-001205EL	Norm does not apply
	DC 27,4V / 2.5A	RPL 242.5 EL				0520-0242.5EL	Norm does not apply
	DC 54,8V / 1.25A	RPL 481.25 EL				0520-481.25EL	Norm does not apply
125 W	DC 13,7V / 10A		RPL 1210 EL			0520-001210EL	yes
	DC 27,4V / 5A		RPL 2405 EL			0520-002405EL	yes
	DC 54,8V / 2.5A		RPL 482.5 EL			0520-0482.5EL	yes
250W	DC 13,7V / 20A		RPL 1220 EL			0520-001220EL	no
	DC 27,4V / 10A		RPL 2410 EL			0520-002410EL	no
	DC 54,8V / 5A		RPL 4805 EL			0520-004805EL	no
250W	DC 13,7V / 20A		RPL 1220 PFCL			0520-001220PL	yes
	DC 27,4V / 10A		RPL 2410 PFCL			0520-002410PL	yes
	DC 54,8V / 5A		RPL 4805 PFCL			0520-004805PL	yes
480W	DC 27,4V / 20A			RPL 2420 EL		0520-002420EL	no
	DC 54,8V / 10A			RPL 48 10 EL		0520-004810EL	no
	DC 27,4V / 20A				RPL 2420 E1L	0520-02420E1L	no
	DC 54,8V / 10A				RPL 48 10 E1L	0520-04810E1L	no
480W	DC 27,4V / 20A			RPL 2420 PFCL		0520-002420PL	yes
	DC 54,8V / 10A			RPL 48 10 PFCL		0520-004810PL	yes

Options:

- differing input- and output voltages possible
- units of lesser power, suitable also for application in telecom
- units with multiple output voltages
- overload and short circuit behavior can be realized to customer's requirements

Standard stock items

Subject to technical modifications

Primary switched single-phase battery chargers

RPL 122.5 EL – 480.65 E1L comp. VDE 0570 part 2-17, EN 61558-2-17, EN 60950 class 1

Noise transmission EN 55011 class B (industry), EN 55022 class B (Telecom)

regulated

application as D.C./D.C.-converter possible

Technical data for model class	**30W**			**30W**		
Model	**RPL 12 2.5 EL**	**RPL 24 1.25 EL**	**RPL 48 0.65 EL**	**RPL 12 2.5 E1L**	**RPL 24 1.25 E1L**	**RPL 48 0.65 E1L**
INPUT						
Rated input voltage, U1 rated	AC 100V - 240V			AC 220V - 400V		
Voltage range, U1min - U1max	AC 85V - 265V or DC 100V - 375V			AC 195V - 460V or DC 230V - 650V		
Frequency	45-65 Hz			45-65 Hz		
Overvoltage protection	varistor AC 275V			varistor AC 460V		
Rated current typical, I1 rated	0,32A at 230VAC ; 0,61A at 115VAC			0,32A at 230VAC ; 0,19A at 400VAC		
Maximum transient pulse Ta = 25°C	< 25A at 230VAC ; < 13A at 115VAC			< 25A at 230VAC ; < 35A at 400VAC		
Maximum transient pulse Ta = 55°C	< 50A at 230VAC ; < 26A at 115VAC			< 50A at 230VAC ; < 60A at 400VAC		
Internal fuse	T1.25A with high switch-off ability			-		
Recommended external fuse	power circuit breaker C6, B10			power circuit breaker C6, B10		
Maximum switching rate	30 switching cycles per hour			30 switching cycles per hour		
Bypass power-line failure	> 50ms at 230VAC ; > 10ms at 115VAC			> 10ms at 230VAC ; > 20ms at 400VAC		
Reverse polarity protection D.C.-input	yes			yes		
OUTPUT						
Rated voltage U2 rated D.C.	DC 13,7V	DC 27,4V	DC 54,8V	DC 13,7V	DC 27,4V	DC 54,8V
Voltage range U2 min - U2 max D.C.	10-15V	23-29V	45-58V	10-15V	23-29V	45-58V
Rated current I2 (at U2 rated)	2.25A	1.15A	0.6A	2.25A	1.15A	0.6A
Protection overload, short circuit, no-load	yes			yes		
Overcurrent limit typical	2.25A	1.15A	0.6A	2.25A	1.15A	0.6A
Short circuit current typical	< 5A	< 3A	< 2A	< 5A	< 3A	< 2A
Overvoltage protection	yes			yes		
Residual ripple f=20Hz...300kHz, Ta=25°C	< 10mV RMS			< 10mV RMS		
Mains stabilization U1 min - U1 max	< 0,1 %			< 0,1 %		
Load stabilization load alteration 10% <-> 90%	< 0,5 %			< 0,5 %		
Overshoot/control time load leap 10% <-> 90%"	< 3.0% < 3ms			< 3.0% < 3ms		
Temp. stability	< 0.03% / K			< 0.03% / K		
Operation in parallel and series	yes			yes		
Status reports	LED green			LED green		
DIRECTIVES						
Mains harmonics limit EN 61000-3-2	not necessary			not necessary		
Interference emission	EN 50081-1, EN 55011 class B, EN 55022 class B			EN 50081-1, EN 55011 class B, EN 55022 class B		
Interference immunity	EN 50082-2			EN 50082-2		
Safety	EN 60950 class I			EN 60950 class I		
Test voltage input/housing	-			-		
Test voltage input/output	3000VAC RMS 50Hz, 1min			3000VAC RMS 50Hz, 1min		
Test voltage output/housing	-			-		
Humidity	85% RH IEC 68-2-30			85% RH IEC 68-2-30		
Vibration and shock	ETS 300 019-2-4, class 4M5			ETS 300 019-2-4, class 4M5		
CE mark	yes			yes		
OPERATING DETAILS						
Efficiency typical	> 80%	> 82%	> 82%	> 80%	> 82%	> 82%
Protection rating comp. VDE 0470 / EN 60529	IP 20			IP 20		
Protection class comp. IEC 536, VDE 0106 T1	I			I		
Overtemperature protection	yes			yes		
Ambient temperature	0°C up to +55°C			-20°C up to +55°C		
Storage temperature	-40°C up to +85°C			-40°C up to +85°C		
Cooling	free convection			free convection		
MECHANICS						
Connection input voltage	connector RM7,62mm to screw 3-pole 0,75-2,5mm² (L1-N-PE) **for D.C./D.C.-converter: + on L1, - on N**			connector RM7,62mm to screw 3-pole 0,75-2,5mm² (L1-N-PE) **for D.C./D.C.-converter: + on L1, - on N**		
Connection output voltage	connector RM5,08mm to screw 2-pole 0,75-2,5mm² (+ -)			connector RM5,08mm to screw 2-pole 0,75-2,5mm² (+ -)		
Housing design	plastic			plastic		
Mounting	snap-on onto mounting rail DIN EN 50022			snap-on onto mounting rail DIN EN 50022		
Installation orientation	vertical			vertical		
Approx. dimensions (W x H x D)	40 x 80 x 85 mm			40 x 80 x 85 mm		
Approx. total weight	0,14kg			0,14kg		

Primary switched single-phase battery chargers

RPL 1205 EL – 482.5 EL comp. VDE 0570 part 2-17, EN 61558-2-17, EN 60950 class 1

Noise transmission EN 55011 class B (industry), EN 55022 class B (Telecom)

regulated

60W units applicable as D.C./D.C.-converters

Technical data for model class	60W			125W		
Model	**RPL 12 05 EL**	**RPL 24 2.5 EL**	**RPL 48 1.25 EL**	**RPL 12 10 EL**	**RPL 24 05 EL**	**RPL 48 2.5 EL**
INPUT						
Rated input voltage, U1 rated	AC 100V - 240V			AC 115V and AC 230V		
Voltage range, U1min - U1max	AC 90 - 264V or DC 120V - 375V			AC 94 - 132V or AC 184 - 264V		
Frequency	45-65 Hz			45-65 Hz		
Overvoltage protection	varistor AC 275V			varistor AC 275V		
Rated current typical, I1 rated	0.7 A at 230VAC ; 1.2A at 115VAC			1,3A at 230VAC ; 2,2A at 115VAC		
Maximum transient pulse Ta = 25°C	< 25A at 230VAC ; < 12A at 115VAC			< 45A at 230VAC ; < 22A at 115VAC		
Maximum transient pulse Ta = 55°C	< 55A at 230VAC ; < 29A at 115VAC			< 85A at 230VAC ; < 43A at 115VAC		
Internal fuse	T2.0A with high switch-off ability			T6.3A with high switch-off ability		
Recommended external fuse	power circuit breaker C6, B10			power circuit breaker B10, B16		
Maximum switching rate	30 switching cycles per hour			30 switching cycles per hour		
Bypass power-line failure	> 50ms at 230VAC ; > 10ms at 115VAC			> 20ms		
Reverse polarity protection D.C.-input	yes			-		
OUTPUT						
Rated voltage U2 rated D.C.	DC 13,7V	DC 27,4V	DC 54,8V	DC 13,7V	DC 27,4V	DC 54,8V
Voltage range U2 min - U2 max D.C.	10,5-15V	21-29V	45-58V	9-15V	21-29V	45-58V
Rated current I2 (at U2 rated)	5.0A	2.5A	1.25A	10A	5A	2.5A
Protection overload, short circuit, no-load	yes			yes		
Overcurrent limit typical	< 8A	< 4A	< 2A	< 11A	< 6A	< 3A
Short circuit current typical	< 12A	< 9A	< 6A	< 16A	< 10A	< 6A
Overvoltage protection	yes			yes		
Residual ripple f=20Hz...300kHz, Ta=25°C	< 15mV RMS	< 10mV RMS		< 15mV RMS	< 10mV RMS	
Mains stabilization U1 min - U1 max	< 0,15 %			< 0,15 %		
Load stabilization load alteration 10% <-> 90%	< 1,0 %	< 0,5 %		< 1,0 %	< 0,5 %	
Overshoot/control time load leap 10% <-> 90%"	< 3.0% < 3ms			< 3.0% < 3ms		
Temp. stability	< 0.02% / K			< 0.02% / K		
Operation in parallel and series	series operation yes. For parallel operation extern series diode necessary			yes		
Statusmeldungen	LED - green			LED - green		
Noise output zero potential change-over contact	yes			yes		
Temperature compensation (battery charger) external NTC-resistor	2,2kΩ-NTC (f. example Siemens B57045K222K)			2,2kΩ-NTC (f. example Siemens B57045K222K)		
DIRECTIVES						
Mains harmonics limit EN 61000-3-2	not necessary			yes		
Interference emission	EN 50081-1, EN 55011 class B, EN 55022 class B			EN 50081-1, EN 55011 class B, EN 55022 class B		
Interference immunity	EN 50082-2			EN 50082-2		
Safety	EN 60950 class I			EN 60950 class 1		
Test voltage input/housing	1500VAC RMS 50Hz, 1min			1500VAC RMS 50Hz, 1min		
Test voltage input/output	3000VAC RMS 50Hz, 1min			3000VAC RMS 50Hz, 1min		
Test voltage output/housing	500VDC			500VDC		
Humidity	85% RH IEC 68-2-30			85% RH IEC 68-2-30		
Vibration and shock	ETS 300 019-2-4, class 4M5			ETS 300 019-2-4, class 4M5		
CE mark	yes			yes		
OPERATING DETAILS						
Efficiency typical	> 82%	> 83%	> 84%	> 85%	> 88%	> 89%
Protection rating comp. VDE 0470 / EN 60529	IP 20			IP 20		
Protection class comp. IEC 536, VDE 0106 T1	I			I		
Overtemperature protection	yes			yes		
Ambient temperature	-40°C up to +55°C			-40°C up to +55°C		
Storage temperature	-40°C up to +85°C			-40°C up to +85°C		
Cooling	free convection			free convection		
MECHANICS						
Connection input voltage	connector RM7,62mm to screw 3-pole 0,75-2,5mm2 (L1-N-PE) **for D.C./D.C.-converter: + on L1, - on N**			connector RM7,62mm to screw 3-pole 0,75-2,5mm² (L1-N-PE)		
Connection output voltage	connector RM5,08mm to screw 2-pole 0,75-2,5mm² (+ -)			connector RM5,08mm to screw 2-pole 0,75-2,5mm² (+ -)		
Connection noise output temperature compensation	connector RM5,08mm to screw 5-pole 0,75-2,5mm² (COM-NO-NC-1-2)			connector RM5,08mm to screw 5-pole 0,75-2,5mm² (COM-NO-NC-1-2)		
Housing design	aluminum / steel			aluminum / steel		
Mounting	snap-on onto mounting rail DIN EN 50022			snap-on onto mounting rail DIN EN 50022		
Installation orientation	vertical			any position		
Approx. dimensions (W x H x D)	51 x 121 x 81 mm			66 x 148 x 113 mm		
Approx. total weight	0,36kg			0,84kg		

Standard stock items

Subject to technical modifications

Primary switched single-phase battery chargers

RPL 1220 PFCL – 4810 PFCL comp. VDE 0570 part 2-17, EN 61558-2-17, EN 60950 class 1

Noise transmission EN 55011 class B (industry), EN 55022 class B (Telecom)

regulated

480W units applicable as D.C./D.C.-converters

Technical data for model class	**250W**			**480W**	
Model	**RPL 12 20 PFCL**	**RPL 24 10 PFCL**	**RPL 48 0.5 PFCL**	**RPL 24 20 PFCL**	**RPL 48 10 PFCL**
INPUT					
Rated input voltage, U1 rated	AC 115V and AC 230V			AC 230V	
Voltage range, U1min - U1max	AC 94 - 132V or AC 184 - 264V			AC 196-264V or DC 270V-375V	
Frequency	45-65 Hz			45-65 Hz	
Overvoltage protection	varistor AC 275V			varistor AC 275V	
Rated current typical, I1 rated	1,9A at 230VAC ; 4,2A at 115VAC			3,1A at 230VAC	
Maximum transient pulse Ta = 25°C	< 35A at 230VAC ; < 17A at 115VAC			< 11A at 230VAC	
Maximum transient pulse Ta = 55°C	< 69A at 230VAC ; < 33A at 115VAC			< 30A at 230VAC	
Internal fuse	T6,3A with high switch-off ability			T6,3A with high switch-off ability	
Recommended external fuse	power circuit breaker B10, B16			power circuit breaker B10, B16	
Maximum switching rate	30 switching cycles per hour			30 switching cycles per hour	
Bypass power-line failure	> 20ms			> 30ms	
Reverse polarity protection D.C.-input	-			yes	
OUTPUT					
Rated voltage U2 rated D.C.	DC 13,7V	DC 27,4V	DC 54,8V	DC 27,4V	DC 54,8V
Voltage range U2 min - U2 max D.C.	9-15V	21-29V	45-58V	23-29V	45-58V
Rated current I2 (at U2 rated)	20A	10A	5A	18A	9A
Protection overload, short circuit, no-load	yes			yes	
Overcurrent limit typical	< 22A	< 11A	< 6A	18A	9A
Short circuit current typical	< 27A	< 14A	< 7A	< 22A	< 12A
Overvoltage protection	yes			yes	
Residual ripple f=20Hz...300kHz, Ta=25°C	< 15mV RMS	< 10mV RMS		< 60mV RMS	
Mains stabilization U1 min - U1 max	< 0,15 %			< 0,05 %	< 0,15 %
Load stabilization load alteration 10% <-> 90%	< 1,0 %	< 0,5 %		< 0,25 %	
Overshoot/control time load leap 10% <-> 90%"	< 3.0% < 3ms			< 3.0% < 3ms	
Temp. stability	< 0.02% / K			< 0.02% / K	
Operation in parallel and series	yes			yes	
Status reports	LED green			LED green	
Noise output zero potential change-over contact	yes			no	
Temperature compensation (battery charger) external NTC-resistor	2,2kΩ-NTC (f. example Siemens B57045K222K)			-	
DIRECTIVES					
Mains harmonics limit EN 61000-3-2	yes			yes	
Interference emission	EN 50081-1, EN 55011 class B, EN 55022 class B			EN 50081-1, EN 55011 class B, EN 55022 class B	
Interference immunity	EN 50082-2			EN 50082-2	
Safety	EN 60950 class I			EN 60950 class I	
Test voltage input/housing	1500VAC RMS 50Hz, 1min			1500VAC RMS 50Hz, 1min	
Test voltage input/output	3000VAC RMS 50Hz, 1min			3000VAC RMS 50Hz, 1min	
Test voltage output/housing	500VDC			500VDC	
Humidity	85% RH IEC 68-2-30			85% RH IEC 68-2-30	
Vibration and shock	ETS 300 019-2-4, class 4M5			ETS 300 019-2-4, class 4M5	
CE mark	yes			yes	
OPERATING DETAILS					
Efficiency typical	> 85%	> 89%	> 90%	> 92%	
Protection rating comp. VDE 0470 / EN 60529	IP 20			IP 20	
Protection class comp. IEC 536, VDE 0106 T1	I			I	
Overtemperature protection	yes			yes	
Ambient temperature	-40°C up to +55°C			0°C up to +55°C	
Storage temperature	-40°C up to +85°C			-40°C up to +85°C	
Cooling	free convection			free convection	
MECHANICS					
Connection input voltage	connector RM7,62mm to screw 3-pole 0,75-2,5mm² (L1-N-PE)			connector RM7,62mm to screw 3-pole 0,75-2,5mm² (L1-N-PE) **for D.C./D.C.-converter: + on L1, - on N**	
Connection output voltage	connector RM5,08mm to screw 4-pole 0,75-2,5mm² (++ --)			connector RM5,08mm to screw 4-pole 0,75-4,0mm² (++ --)	
Connection noise output temperature compensation	connector RM5,08mm to screw 5-pole 0,75-2,5mm² (COM-NO-NC-1-2)			-	
Housing design	aluminum / steel			aluminum / steel	
Mounting	snap-on onto mounting rail DIN EN 50022			snap-on onto mounting rail DIN EN 50022	
Installation orientation	any position			front plate horizontal, connections below	
Approx. dimensions (W x H x D)	75 x 173 x 122 mm			245 x 138 x 100 mm	
Approx. total weight	1,5kg			2,4kg	

Subject to technical modifications

Standard stock items

Primary switched single-phase battery chargers

RPL 1220 EL – 4810 E1L comp. VDE 0570 part 2-17, EN 61558-2-17, EN 60950 class 1

Noise transmission EN 55011 class B (industry), EN 55022 class B (Telecom)

regulated

480W * units applicable as D.C./D.C.-converters

Technical data for type class	250W			480W			
Type	**RPL 12 20 EL**	**RPL 24 10 EL**	**RPL 48 0.5 EL**	**RPL 24 20 EL***	**RPL 48 10 EL***	**RPL 2420 E1L**	**RPL 4810 E1L**
INPUT							
Rated input voltage, U1 rated	AC 115V and AC 230V			AC 230V		AC 115V	
Voltage range, U1min - U1max	AC 94 - 132V or AC 184 - 264V			AC 196-264V / DC 270V-375V		AC 93-132V	
Frequency	45-65 Hz			45-65 Hz			
Overvoltage protection	varistor AC 275V			varistor AC 275V		varistor AC 150V	
Rated current typical, I1 rated	2,5A at 230VAC ; 4,2A at 115VAC			3,6A at 230VAC		5,6A at 115VAC	
Maximum transient pulse Ta = 25°C	< 35A at 230VAC ; < 17A at 115VAC			< 11A at 230VAC		< 11A at 115VAC	
Maximum transient pulse Ta = 55°C	< 69A at 230VAC ; < 33A at 115VAC			< 30A at 230VAC		< 30A at 115VAC	
Internal fuse	T6,3A with high switch-off ability			T6,3A with high switch-off ability			
Recommended external fuse	power circuit breaker B10, B16			power circuit breaker B10, B16			
Maximum switching rate	30 switching cycles per hour			30 switching cycles per hour			
Bypass power-line failure	> 20ms			> 40ms at 230VAC		> 40ms at 115VAC	
Reverse polarity protection D.C.-input	-			yes			
OUTPUT							
Rated voltage U2 rated D.C.	DC 13,7V	DC 27,4V	DC 54,8V	27,4V	54,8V	27,4V	54,8V
Voltage range U2 min - U2 max D.C.	9-15V	21-29V	45-58V	23-29V	45-58V	23-29V	45-58V
Rated current I2 (at U2 rated)	20A	10A	5A	18A	9A	18A	9A
Protection overload, short circuit, no-load	yes			yes			
Overcurrent limit typical	< 22A	< 11A	< 6A	18A	9A	18A	9A
Short circuit current typical	< 27A	< 14A	< 7A	< 22A	< 12A	< 22A	< 12A
Overvoltage protection	yes			yes			
Residual ripple f=20Hz...300kHz, Ta=25°C	< 15mV RMS	< 10mV RMS		< 60mV RMS			
Mains stabilization U1 min - U1 max	< 0,15 %			< 0,05 %			
Load stabilization load alteration 10% <-> 90%	< 1,0 %	< 0,5 %		< 0,25%			
Overshoot/control time load leap 10% <-> 90%"	< 3.0% < 3ms			< 3.0% < 3ms			
Temp. stability	< 0.02% / K			< 0,02% / K			
Operation in parallel and series	yes			yes			
Status reports	LED green			LED green			
Noise output zero potential change-over contact	yes			-			
Temperature compensation (battery charger) external NTC-resistor	2,2kΩ-NTC (f. example Siemens B57045K222K)			-			
DIRECTIVES							
Mains harmonics limit EN 61000-3-2	no			no		not necessary	
Interference emission	EN 50081-1, EN 55011 class B, EN 55022 class B			EN 50081-1, EN 55011 class B, EN 55022 class B			
Interference immunity	EN 50082-2			EN 50082-2			
Safety	EN 60950 class I			EN 60950 class I			
Test mark / approbation	-	cUL	-	-			
Test voltage input/housing	1500VAC RMS 50Hz, 1min			1500VAC RMS 50Hz, 1min			
Test voltage input/output	3000VAC RMS 50Hz, 1min			3000VAC RMS 50Hz, 1min			
Test voltage output/housing	500VDC			500VDC			
Humidity	85% RH IEC 68-2-30			85% RH IEC 68-2-30			
Vibration and shock	ETS 300 019-2-4, class 4M5			ETS 300 019-2-4, class 4M5			
CE mark	no			no		not necessary	
OPERATING DETAILS							
Efficiency typical	> 85%	> 89%	> 90%	> 92%			
Protection rating comp. VDE 0470 / EN 60529	IP 20			IP 20			
Protection class comp. IEC 536, VDE 0106 T1	I			I			
Overtemperature protection	yes			yes			
Ambient temperature	-40°C up to +55°C			0 up to +55°C			
Storage temperature	-40°C up to +85°C			-40°C up to +85°C			
Cooling	free convection			free convection			
MECHANICS							
Connection input voltage	connector RM7,62mm to screw 3-pole 0,75-2,5mm² (L1-N-PE)			connector RM7,62mm to screw 3-pole 0,75-2,5mm² (L1-N-PE) **for D.C./D.C.-converter: + on L1, - on N**			
Connection output voltage	connector RM5,08mm to screw 4-pole 0,75-2,5mm² (+ -)			connector RM7,62mm to screw 4-pole 0,75-4,0mm² (+ + - -)			
Connection noise output temperature compensation	connector RM5,08mm to screw 5-pole 0,75-2,5mm² (COM-NO-NC-1-2)			-			
Housing design	aluminum / steel			aluminum / steel			
Mounting	snap-on onto mounting rail DIN EN 50022			snap-on onto mounting rail DIN EN 50022			
Installation orientation	any position			front plate horizontal, connections below			
Approx. dimensions (W x H x D)	75 x 173 x 122 mm			245 x 138 x 100 mm			
Approx. total weight	1,5kg			2,0kg			

Pulse battery chargers

RLEC 2403S, 2405S and 2410S comp. to VDE 0570 part 2-6, EN 61558-2-6
RLEC 1220, 2420, 1240 and 2440 comp. to VDE 0570 part 2-6, EN 61558-2-6

The battery chargers series RLEC apply the ECS charging system which, in conjunction with our patented switching concept, is considered the optimum charging method available at present. **All stock items are adjusted to NiCd-accumulators.** Internal programming on manufacturer´s part permits both maintenance-free lead acid and NiCd storage batteries as well as open Pb-batteries to be charged 100% without prior discharging.

The ECS charging system adapts itself perfectly to the individual nature of the battery to be charged, so any exemplary leakage or the history of the battery become irrelevant. The battery itself controls the charging process, because the momentary state of the battery is measured continually and charging is controlled according to these measured values. In this way the battery always draws the exact amount of energy it is able to store at the moment. This results in high efficiency without causing any damaging heat to the cells. Moreover charging time is reduced considerably as the charging process constantly adapts to the amount of energy the battery can absorb.

The battery's number of charging cycles is increased significantly which in turn increases battery's service life considerably.

Even older batteries can be regenerated with the ECS charging method as the charging pulses format the individual cells and remove sulfating, minimizing the memory effect.

Precise determination of the end of charging process prevents short-time overcharging of battery. That way repeated attempts to recharge full batteries are detected and do not lead to detrimental overcharging. When the charging process has been completed the charger continues to take care of the battery, monitoring it continuously and providing the ideal float charge. The battery is always ready for use.

Buffer-battery system is fully guaranteed, i.e. energy can also be drawn during mains connection. The reverse current is <=1mA during switch off.

LEDs for visual control of charging progress .

Example of charging cycles:

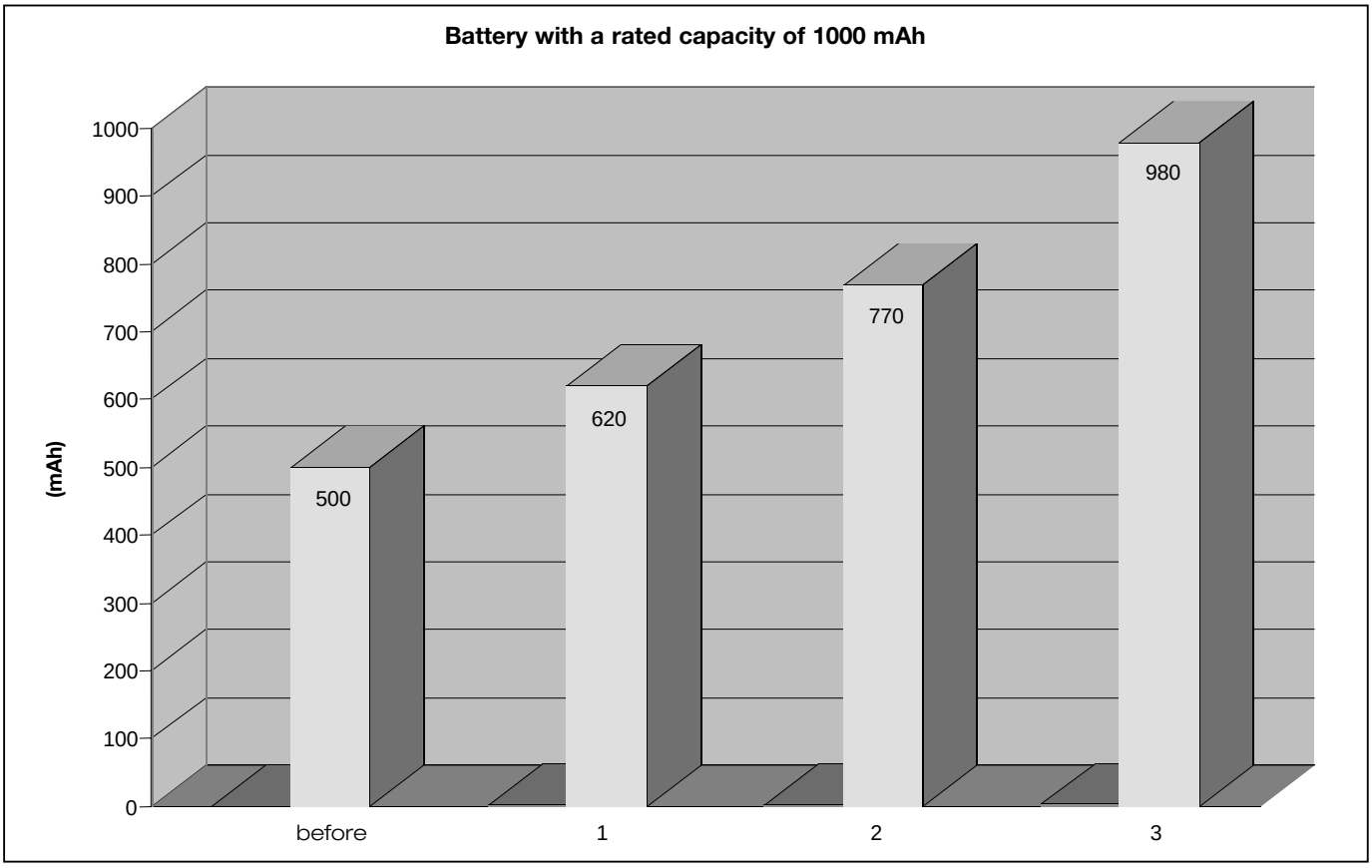

Subject to technical modifications

Standard stock items

Pulse battery chargers

RLEC 2403S, 2405S and 2410S comp. to VDE 0570 part 2-6, EN 61558-2-6
RLEC 1220, 2420, 1240 and 2440 comp. to VDE 0570 part 2-6, EN 61558-2-6

Symbolic diagram of the charging process:

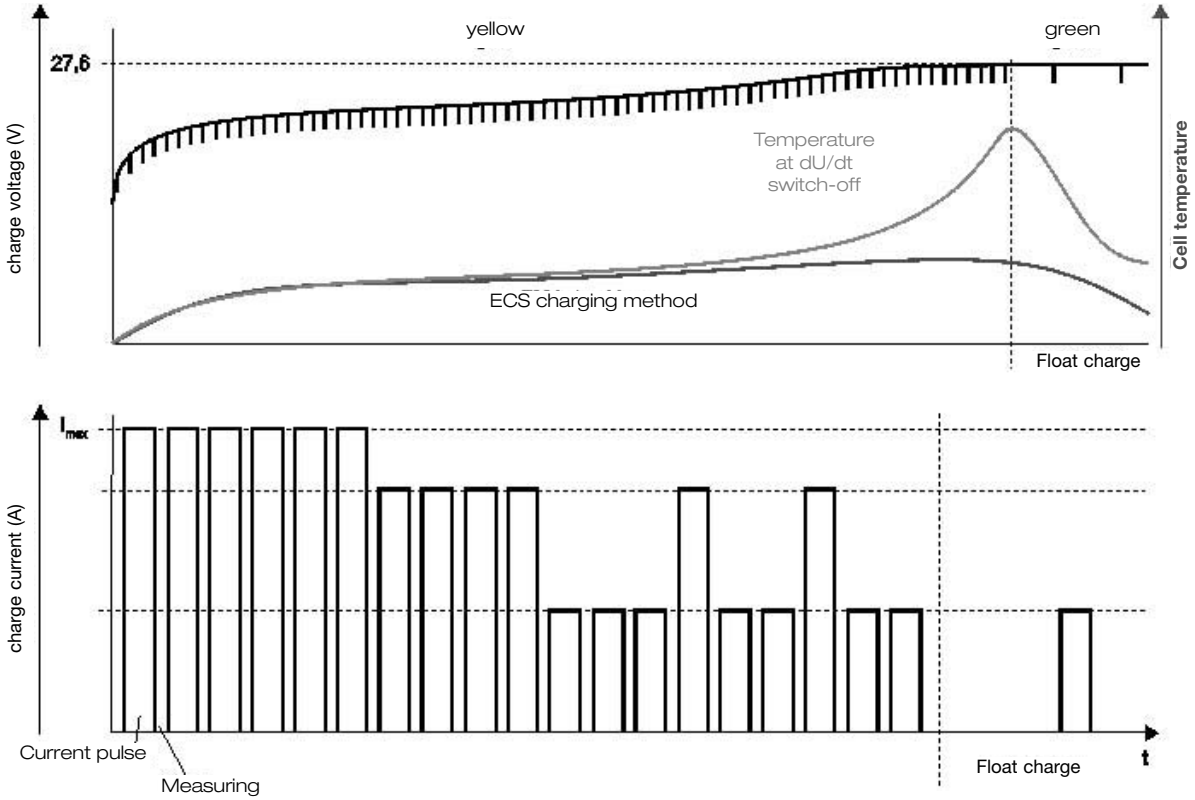

Advantages:

- Process-controlled fast charging to full capacity
- Innovative process prevents memory effect and regenerates batteries
- Up to 10 000 cycles possible
- Independent from charging condition
- Adapts charging precisely to battery's condition
- Automatic temperature control
- Automatic monitoring of charge voltage and charge amount
- Automatic termination of charging process
- Automatic intelligent float charge
- Reduces charging time considerably
- Automatic overcharge protection
- Short circuit proof and reverse polarity protected
- Significant increase of battery's service life
- Cost reduction due to battery's prolonged service life
- Available for NiCd or lead acid batteries

Series RLEC...S

As an optional extra, the battery chargers can be equipped with a centralized alarm via zero potential contact (contact is closed during battery charging).
On request the chargers can also be provided for different cell quantities
(Pb max. 12 cells, NiCd max. 20 cells)

The battery chargers come in a compact plastic housing that provides comprehensive protection against accidental contact and meets safety requirements for protection against electric shock comp. to VDE 0106 part 101.
The housing is designed for snap-on attachment to DIN EN 50022 rails for easy mounting.

Series RLEC

The battery chargers are fitted into a robust plastic-coated steel housing.

Pulse battery chargers

RLEC 2403S, 2405S and 2410S comp. to VDE 0570 part 2-6, EN 61558-2-6

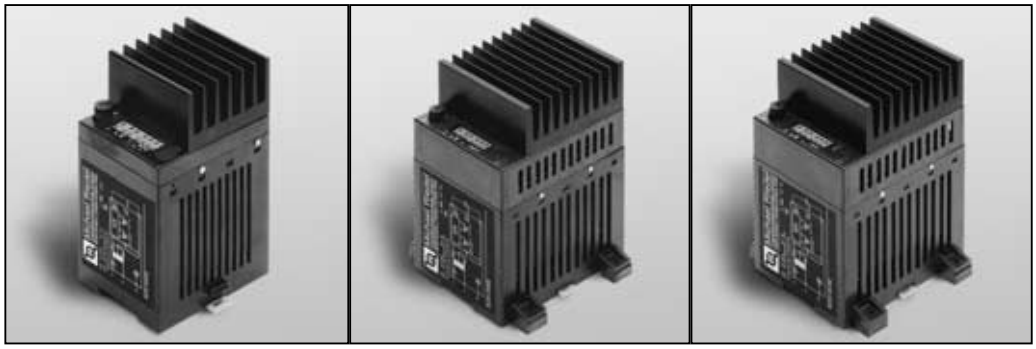

RLEC 2403S **RLEC 2405S** **RLEC 2410S**

Technical data for model	RLEC 2403S	RLEC 2405S	RLEC 2410S
Input			
Mains input voltage	AC 230V **or** AC 400V		
Mains input voltage range	+6% to -10%		
Frequency	50Hz / 60Hz		
Input fuses AC 230V AC 400V	5 x 20 mm 1,25 A time lag external	5 x 20 mm 2,5 A time lag external	5 x 20 mm 4,0 A time lag external
Output			
Battery rated voltage	DC 24 V	DC 24 V	DC 24 V
Max. charge current	DC 3 A	DC 5 A	DC 10 A
Battery type	NiCd batteries (factory internal programming for Pb-batteries possible)		
Status display two-color LED red LED	yellow: charging / green: charged trouble (battery defective or outside tolerance range)		
Charging characteristic	ECS method in conjunction with patented switching concept		
Temperature control during charging	charge dependent on battery temperature		
Overload protection	via internal electronic current limiter		
Reverse current	when mains off, I =< 1mA		
Reverse polarity protection	integrated (reverse polarity current < 1mA)		
Overtemperature protection	automatic cut-off if battery or electronics overheats		
RFI suppression	better than EN 55011 class B		
Temperature range	0° C to + 40° C		
General data			
Transformer test voltage	between input and output comp. to regulation (safety transformer)		
Directives	VDE 0570 part 2-6, EN 61558-2-6, EN 61131-2/part 2		
CE-mark	yes		
Installation orientation	vertical		
Cooling	convection		
Type of connection	PC terminals		
Connection data	fine strand max. 2,5mm²		
Mounting	on DIN EN 50022 mounting rail, spacing > 8mm		
Protection rating comp. VDE 0470	IP 20		
Protection class comp. VDE 0106 T1	prepared for protection class II		
Insulation class	E		
Dimensions in mm approx. (Length/Width/Depth)	82 x 90 x 153	134 x 125 x 175	134 x 125 x 175
Mounting template in mm, approx.	-	87 x 120	87 x 120
Article no. AC 230 V AC 400 V	0239-0002403S 0240-0002403S	0239-0002405S 0240-0002405S	0239-0002410S 0240-0002410S
Copper weight in kg	0,97	1,18	1,18
Weight in kg	2,5	4,3	4,5

Pulse battery chargers

RLEC 1220, 2420, 1240 and 2440 comp. to VDE 0570 part 2-6, EN 61558-2-6

RLEC 1220

RLEC 2440

Technical data for model	RLEC 1220	RLEC 2420	RLEC 1240	RLEC 2440
Input				
Mains input voltage	AC 230V			
Mains input voltage range	+6% to -10% comp. to DIN IEC 38			
Frequency	50Hz / 60Hz			
Input fuses 230V	ETA 3 A	ETA 5 A	ETA 5 A	ETA 8 A
Output				
Battery rated voltage	DC 12V	DC 24V	DC 12V	DC 24V
Max. charge current	20ADC	20ADC	40ADC	40ADC
Battery type	lead acid or NiCd batteries (battery type can be programmed internally)			
Status display green LEDs yellow red	charged charging trouble (battery defective or outside temperature range)			
Charging characteristic	ECS method in conjunction with patented switching concept			
Temperature control during charging	charge dependent on battery temperature			
Overload protection	via internal electronic current limiter			
Reverse current	when mains off, I =< 1mA			
Reverse polarity protection	integrated (reverse polarity current < 1mA)			
Overtemperature protection	automatic cut-off if battery or electronics overheat			
RFI suppression	better than EN 55011 class B			
Temperature range	0° C to + 40° C			
Efficiency	90 %			
General data				
Transformer test voltage	between input and output comp. to regulation (safety transformers)			
Directives	VDE 0570 part 2-6, EN 61558-2-6, EN 61131-2/part 2			
CE-mark	yes			
Installation orientation	any position			
Cooling	convection	forced air		
Type of connection	terminal blocks (protected against finger touch comp. to VBG 4)			
Connection data	fine strand primary max. 4 mm^2 secondary max. 10 mm^2		fine strand primary max. 4 mm^2 secondary max. 16 mm^2	
Mounting	integrated mounting brackets			
Protection rating comp. VDE 0470	IP 20			
Protection class comp. VDE 0106 T1	I			
Insulation class	E			
Dimensions in mm approx. (Length / Width / Height)	210 / 225 / 190	195 / 315 / 175	195 / 315 / 175	240 / 350 / 195
Mounting template in mm, approx.	200 / 115	290 / 125	290 / 125	330 / 140
Article no. Pri. 230V Pri. 400V	0237-230-012-01 0238-400-012-01	0237-230-024-02 0238-400-024-02	0237-230-012-03 0238-400-012-03	0237-230-024-04 0238-400-024-04
Copper weight in kg	1,03	1,68	1,68	2,50
Weight in kg	8,00	15,00	15,00	18,00

DC - UPS modules

RDCUSV 3S to RDCUSV 50S

Product description

We are faced daily with trouble in our mains supply systems which can add up to 10% of total operation time. Fluctuations and voltage dips occur, occasionally even total power failures, for example caused by strokes of lightning or faulty maintenance. A suitable UPS-system (Uninterruptible Power Supply) provides protection against such faults.

According to EN 61131-2 / part 2 (limit values for rated D.C. voltage at DC 24 V) the currently valid operational voltage for electronic controls is DC 24V (DC 20.4V - DC 28.8V RMS). Power packs have to be designed accordingly.

In connection with our D.C. power supplies we produce DC UPS modules for such cases. They can be connected easily secondary in parallel, thereby providing reliable protection for your control units.

The patented technology of our UPS modules make switching controllers such as boost choppers unnecessary. EMC problems therefore do not occur.

All Riedel-UPS modules, inclusive battery, are fitted into compact housings and easy to mount.

The DC UPS modules can be snapped onto mounting rails according to DIN EN 50022. The module is available in versions 24 VDC 10A 30s, 24 VDC 20A 30s and 24 VDC 40A 30s. Other types are available on request.

For application the module is to be connected in parallel to the D.C. voltage output of a DC 24V power pack (see schematic diagram) and the "OFF" terminal is connected to the minus terminal.

When switching off this "OFF"-contact must be opened via the auxiliary contact of the main switch, so that the UPS-module is deactivated!

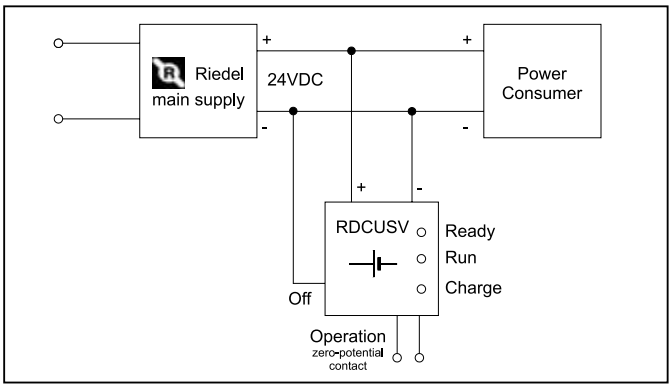

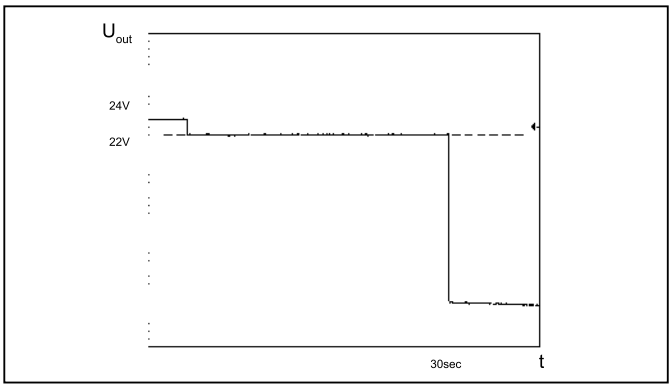

The module's electronics monitors the output voltage and switches the battery on when previously set threshold value (22VDC) is not reached. The internal battery serves as supply source for the power consumer over a defined period (up to 30 seconds) providing a maximum current of 10A, 20A or 40A which is limited internally. The output voltage is stabilized to a threshold value of 22 VDC (see diagram).

LEDs provide a visual indicator, signaling Ready (green), UPS-operation (yellow) and battery undervoltage (red). A zero potential contact opens when UPS-operation begins, so signaling a mains power failure.

For control of the UPS module an input terminal is provided, which must be connected to the minus-terminal to activate the module.

For non-stabilized D.C. supplies we offer a more reasonable version of DC UPS modules, featuring an activation threshold voltage of 20.6VDC. At 20.6VDC the output voltage of the module is still within limit values for D.C. voltage of 24VDC comp. to EN 61131-2 / part 2 in the event of UPS activation.

The standard product range can be extended to include custom designs.

DC - UPS modules

RDCUSV 3S to RDCUSV 50S

Construction

- Plastic enclosure for snap-on mounting (DIN EN 50022)
- LED status display on front
  - Ready: green LED - UPS is ready to provide current
  - Run: yellow LED - battery is providing current
  - Charge: red LED - battery voltage is too low
- Zero potential signal output via screw-type terminals
  - UPS active: battery is providing current contact opens
- Input to switch on the UPS function via screw-type terminal
  Connect OFF-terminal to minus terminal for switch on

Function

- In the event of mains failure, stabilized output voltage (22 VDC resp. 20.6 VDC)
- Short circuit proof
- Automatic cut-off in the event of:
  - overtemperature
  - low battery voltage (17 VDC)
- Automatic charging
  - IU characteristic

Option

Switch off back-up time limit for longer UPS-times

Maximal back-up capacities on request

Back-up times

	RDCUSV 3S	RDCUSV 10S / 16S	RDCUSV 20S /30S	RDCUSV 40S / 50S
6 min	2,8 A	8,0 A	21,0 A	22,0 A
10 min	1,9 A	5,9 A	16,0 A	17,0 A
30 min	0,8 A	2,3 A	6,0 A	7,0 A
60 min	0,5 A	1,8 A	3,8 A	4,2 A
120 min	0,3 A	0,75 A	2,0 A	2,6 A
240 min	0,17 A	0,4 A	1,0 A	1,6 A

Top view

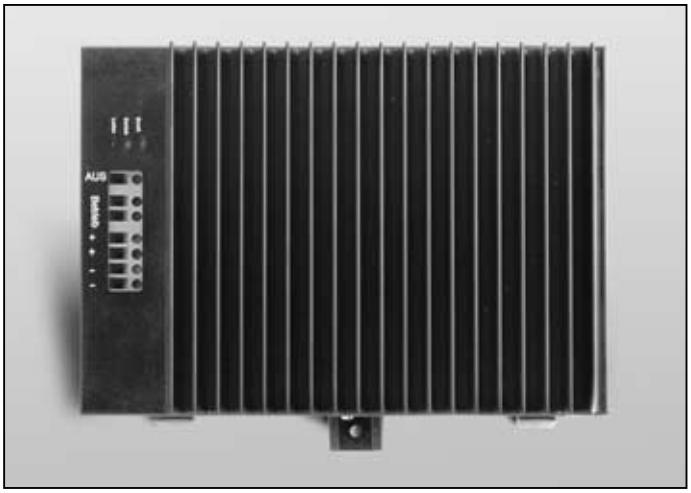

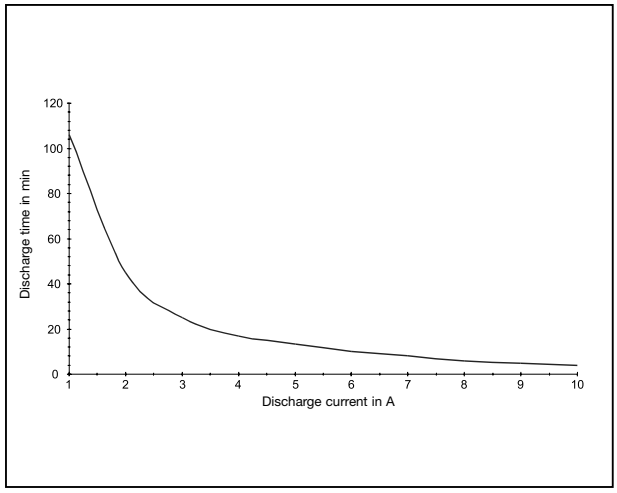

Discharge characteristic Example RDCUSV 10S

DC - UPS modules

RDCUSV 3S to RDCUSV 50S

RDCUSV 3S

RDCUSV 10S, RDCUSV 16S

RDCUSV 20S, RDCUSV 30S

RDCUSV 40S, RDCUSV 50S

Version for activation threshold 22 VDC:

Technical data	RDCUSV 3S	RDCUSV 10S	RDCUSV 20S	RDCUSV 40S
Max. current drain	3 ADC	10 ADC	20 ADC	40 ADC
Back-up time at max. current	adjusted by Riedel to 30 s **(other back-up times optional)**			
Maximum current pick-up after total discharge	≤ 0,3 A	≤ 1 A	≤ 2 A	3 A
Back-up ready for 1 cycle after total discharge	after 5 mins.			
Charging system	IU characteristic			
Activation threshold	**22 VDC**			
Total discharge protection	switch-off threshold 17 VDC			
Type of battery	lead acid			
Signal output	zero potential, load up to 24 VDC / 50 mA			
Ambient temperature	0– 40°C			
General data				
CE-mark	yes			
Installation orientation	any position			
Type of connection	P.C. terminals			
Connection data	fine strand, max. 2,5mm²			fine strand, max. 4mm²
Mounting	mounting rail (DIN EN 50 022), spaced > 8mm			
Protection rating comp. VDE 0470	IP 20			
Protection class comp. VDE 0106 T1	SELV			
Weight in kg	approx. 0,9	approx. 3,5	approx. 4,4	approx. 6,5
Article no. 22,0 V	0250-0000003S	0250-0000010S	0250-0000020S	0250-0000040S
Dimensions in mm (L/W/H)	82 / 90 / 120	134 / 125 / 150	157 / 175 / 185	200 / 180 / 185

Version for activation threshold 20,6 VDC:

Technische Daten	RDCUSV 3S	RDCUSV 10S	RDCUSV 16S	RDCUSV 20S	RDCUSV 30S	RDCUSV 40S	RDCUSV 50S
Max. current drain	3 ADC	10 ADC	16 ADC	20 ADC	30 ADC	40 ADC	50 ADC
Back-up time at max. current	adjusted by Riedel to 30 s **(other back-up times optional)**						
Maximum current pick-up after total discharge	≤ 0,3 A	≤ 1 A		≤ 2 A		≤ 3 A	
Back-up ready for 1 cycle after total discharge	after 5 mins.						
Charging system	IU characteristic						
Activation threshold	**20,6 VDC**						
Total discharge protection	switch-off threshold 17 VDC						
Type of battery	lead acid						
Signal output	zero potential, load up to 24 VDC / 50 mA						
Ambient temperature	0– 40°C						
General data							
CE-mark	yes						
Installation orientation	any position						
Type of connection	P.C. terminals						
Connection data	fine strand, max. 2,5mm²					fine strand, max. 4mm²	
Mounting	mounting rail (DIN EN 50 022), spaced > 8mm						
Protection rating comp. VDE 0470	IP 20						
Protection class comp. VDE 0106 T1	SELV						
Weight in kg	approx. 0,9	approx. 3,5		approx. 4,4		approx. 6,5	
Article no. 20,6 V	0251-0000003S	0251-0000010S	0251-0000016S	0251-0000020S	0251-0000030S	0251-0000040S	0251-0000050S
Dimensions in mm (L/W/H)	82 / 90 / 120	134 / 125 / 150		157 / 175 / 185		200 / 180 / 185	

Standard stock items

Subject to technical modifications

DC - UPS module

RIPCUSV 5S supply for industrial PCs (IPC)

Product description:

RIPCUSV 5S complements series RDCUSV. RIPCUSV-modules are equipped with a serial interface, which, connected to a 24VDC supplied industrial-PC (IPC) and the operation system Microsoft Windows NT, enables setup of a computer controlled non-interruptible power supply. Communication between UPS and IPC takes place via interface, i.e. the IPC receives a signal after UPS-time limit has been reached. The IPC then closes the system. As soon as the computer has shut down the UPS receives a report and in turn shuts off the computer's supply voltage.

The patented method of DC-UPS-modules makes any application of switching controllers, for example boost choppers, unnecessary. EMC-problems do not occur.

All Riedel IPC-UPS-modules are installed together with the accumulator in compact housings and are easy to assemble. IPC-UPS-modules are snapped onto supporting rails according to DIN EN 50022. For operation connect them to the DC-output of the DC 24V-power supply (see block diagram) and connect terminal "AUS / OFF" with the minus-terminal.

The module's electronics guards the output voltage and switches on the accumulator when pre-adjusted threshold (20,6VDC) falls short. The internal accumulator serves as supply source to the consumer for a defined time range with 5A maximal current, which is limited internally. The output voltage will be controlled to threshold value (20,6VDC). For visual control LEDs signal readiness (green), UPS-operation (yellow) and accumulator undervoltage (red).

Construction:
- Plastic housing for snap-on assembly (DIN EN 50022)
- Unit status display via LED on front side
  - • Ready: LED green - UPS can deliver current
  - • Operation: LED yellow - accu delivers current
  - • Accu is charging: LED red - undervoltage accu
- Opening for UPS switch-on via screw-terminal
  For switch-on connect terminal "AUS / OFF" with minus-terminal

Function:
- During power-line failure stabilized output voltage (20,6 VDC)
- Boot time bridging adjustable (2-3-4-5min)
- Adjustable UPS-time (0,5 up to 30s), after that signal to IPC via interface
- UPS switch-off via signal from computer;
  automatic switch-off after adjustable waiting period (4-6-8-10min)
- Short circuit proof
- Automatic switch-off at:
  - • · Undervoltage accu (17 VDC)
- Automatic charge
  - • · IU-characteristic

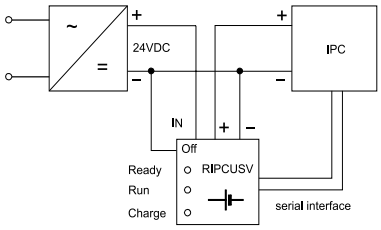

Article no.: 0254-0000005S

Accu-packs

Series RAP in 2Ah, 5Ah, 7Ah

In general:

The compact and space-saving industrial design of the enclosed accu-packs series RAP provides comprehensive protection against accidental contact. The units snap easily onto DIN EN 50022 mounting rails and can be fixated additionally with screws. Units of the same type can be switched in parallel or in series.

Riedel-accu-packs contain valve compatible, maintenance free industrial lead acid batteries showing high current delivery which originally had been specially developed for application in **danger report systems, emergency lighting, medicine, alarms, non-interruptible power supplies and Telecom-systems**.

The accu-packs can be fitted in any position except upside down. Do not operate these units in upside down position.

Input and output are protected with flat-plug fuses readily available all over the world.

Other capacities on request

Type	Power	Voltage	Article No.	Approx. dimensions in mm		
	Ah	VDC		Length	Width	Depth
RAP 24/2Ah	2	24	0253-000002Ah	125	135	160
RAP 24/5Ah	5	24	0253-000005Ah	175	150	180
RAP 24/7Ah	7	24	0253-000007Ah	200	180	180

Subject to technical modifications

Standard stock items

Power supplies with back-up battery

RADA 4730 - RADA 4990

Features:

- 12VDC and 24VDC
- Safe design
- Temperature controlled
- Signal power line failure
- 15A output switch
- Small size
- EMC EN55022B
- Total discharge protection
- Mains connection via clamp terminal or screw terminal
- Optional sabotage switch against undue opening of housing

Article numbers:

RADA 4730 = 0260-00004730
RADA 4740 = 0260-00004740
RADA 4980 = 0260-00004980
RADA 4570 = 0260-00004570
RADA 4990 = 0260-00004990

Technical data			
INPUT			
Input range	184...264 VAC		
Frequency	45...65Hz		
Efficiency (U_{in} = 230 VAC, 100% load)	**12V** RADA 4730 85%	**24V** RADA 4740 87% RADA 4980 88%	**48V** RADA 4570 87% RADA 4990 89%
Protection	EN 60950 class 1		
Insulation input / grounding input / output output / grounding	1500 VAC RMS 50Hz, 1min 3000 VAC RMS 50Hz, 1min 500 VDC		
EMC	EN 55022 class B		
Inrush current	limited via 7R NTC-resistor		
Overvoltages	protected via 275V 72J VDR-resistor		
Input fuse	RADA 4830 and RADA 4570 T6.3A, all others T4A		
CE-mark	yes		
OUTPUT	**12V**	**24V**	**48V**
Charge voltage (50% load)	13.7 V	27.3 V	54.6 V
Output adjustment (select)	11...15 V	23...29 V	45…58VDC
Minimum voltage (total discharge protection)	10V±0.3V	20V±0.5V	40V±0.5V
ripple voltage (f = 20Hz...300kHz, Tamb = 25°C)	< 15mVrms	< 15mVrms	< 15mVrms
Load stabilization (Iout = 10...100%)	±1.5 %	±1 %	±0.5 %
Mains stabilization (Uinmin...Uinmax)	±0.1 %	±0.1 %	±0.1 %
Output current, charger	10 A	5 A (4740), 10A (4980)	2.5A (4570), 5A (4990)
Current limiting, charger	< 11 A	< 6 A (4740), < 11A (4980)	< 3 A (4570), < 6A (4990)
Short circuit limitation, charger and battery	Fuse 15A		
OUTPUT	**12V**	**24V**	**48V**
Battery capacity	14Ah	7Ah	2Ah
Battery type / Yuasa	NP 7-12 7Ah 12V	NP 7-12 7Ah 12V	NP 2-12 2Ah 12V
UPS-time (approx. values)	10A / 45min, 2A / 5h	5A / 45min, 1A / 5 h	2A / 25 min, 0.5A / 2.5 h
Temperature compensation for battery	2k2 NTC-resistor		
Total discharge protection for battery	trigger at 10V	trigger at 20V	trigger at 40V
DISPLAYS AND ALARM REPORTS			
Charger output OK	green LED is on		
Power line failure	zero potential opening and closing relay contact, relay 24VDC/0.3A or 30VAC/0.5A		
Sabotage switch against undue opening of housing	microswitch, opening and closing contact		
MECHANICS			
Measurements RADA 4740, 4980, 4990 RADA 4730, 4570	wall / 188 x 317 x 110mm wall / 188 x 277 x 110mm		
Installation	wall / screw connection		
Weight	without batteries <3kg (with batteries 12V/8kg, 24V/8kg, 48V/5kg)		
Shutting of door	with tool (screw driver)		
Enclosure	steel housing IP21		
OPERATING CONDITIONS			
Operating temperature	-40°C...+55°C without batteries (-20°C...+45°C with standard batteries)		
Humidity	85% RH IEC68-2-30		
Cooling	convection		
CONNECTIONS			
Input RADA 4740, RADA 4980, RADA 4990 RADA 4730, RADA 4570 All types	2,5mm² 3-pole screw terminal (L-N-PE) 6mm² 3-pole screw terminal (L-N-PE) cable inlet on top, incl. 1,5 m line cable		
Ausgang RADA 4740, 4980, 4990 RADA 4730, 4570 All types	2,5mm² 9-pole screw terminal (++, - -, alarm, battery) 2,5mm² 2-pole screw terminal (door alarm) 6mm² 8-pole screw terminal (+, -, alarm, door alarm) cable inlet on top		

available on short notice

Subject to technical modifications

Voltage monitoring modules

Series RCV

Unit name: RCV: Riedel Control Voltage

Application: Monitoring DC voltage

Features:

- Compact modern industrial design
- Fits DIN EN 50022 mounting rail
- Connections finger-safe and back of hand safe comp. VBG 4 accident prevention regulations
- Simple installation
- Analysis via alarm contact (change-over contact)
- Relay remains closed as long as voltage is within tolerance range
- Zero potential contact, load capacity up to 200mA/230VAC
- Green LED remains on as long as relay is closed
- RCVU: monitors undervoltage
- RCV: monitors both under- and overvoltage

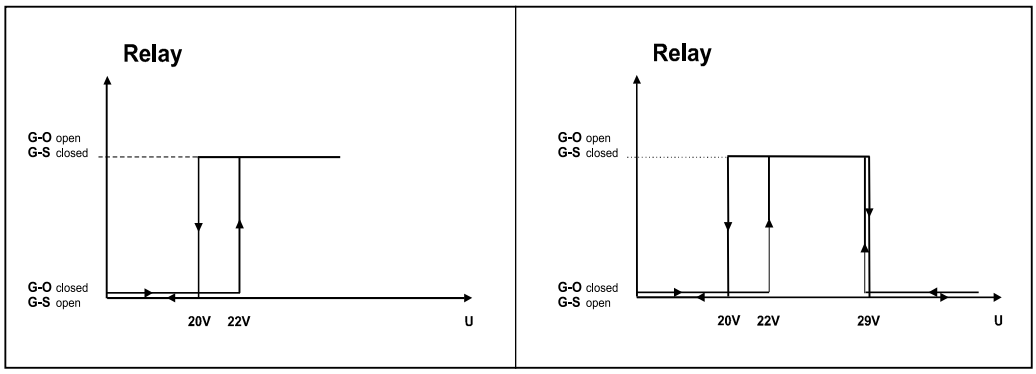

Technical data	RCVU 24 VS monitors undervoltage only	RCV 24 VS under- and overvoltage monitoring
Operation voltage	DC 24 V	DC 24 V
Current consumption	Relay closed < 30mA Relay released < 3mA	Relay closed < 30mA Relay released < 3mA
Temperature drift	< 0,01%	< 0,01%
Tolerance	< 0,1%	< 0,1%
Reverse polarity protection	yes	yes
Type of connection	P.C. terminal	P.C. terminal
Article no.	0252-00000001	0252-00000002
Dimensions in mm Width / length / depth	22 / 79 / 84	22 / 79 / 84

Application example:
Protection against total discharge

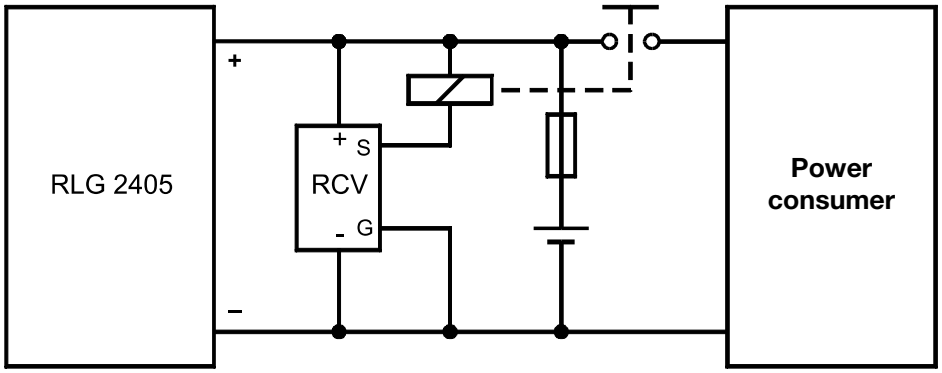

Product group

D

Robots manufacture cars - automation is common. The application of modern technology not only makes production economic, it also leads to more tolerable jobs and long-lasting, reliable vehicles. The economic production of reliable products at state-of-the art technology is part and parcel of our company's philosophy - a good reason for the car industry and their suppliers to use Riedel products.

Three-phase compact rectifier transformers

Safety transformers **comp. VDE 0570 part 2-6, EN 61558-2-6**

RDRK 2,5 – 60

Standard version: with connected three-phase bridge rectifier,
input 3 x 380/400/420 V, output 24 VDC, residual ripple < 5%

Capacitor version: with connected three-phase bridge rectifier and capacitor
input 3 x 380/400/420 V, output 24 VDC, residual ripple < 2%

Series RDRK has been developed specially for application with programmable logic controllers (PLC). The transformers are well dimensioned and voltage stable allowing for particular flat characteristic between no-load and load. Over- or undervoltages, critical for PLCs, do not occur even at increased mains voltage fluctuations.

Series RDRK is equipped with strongly oversized profile heat sinks that guarantee intensified heat dissipation. Its rectifiers are protected against temporary current surges and voltage spikes.

The capacitor version is protected via a mini circuit board containing a matching varistor, foil capacitor and discharge resistor.

Harmonic rule EN 61000-3-2 is observed.

Design: Open vertical design, stationary, for installation and set-up in dry rooms, separate windings, sturdy mounting brackets. All connections via non-tracking terminal blocks with screw connections. The terminals are protected against finger touch or contact with the back of the hand in compliance to accident prevention regulations (VBG 4).

IP 00, suitable for installation up to protection rating IP 23, insulation class E, max. ambient temperature ta40°C, color grey, heat sink black anodized.

The capacitor version shows slight diversions from stated measurements but attachments remain the same.

Further designs available on request (fuses, voltages, connections, etc.)

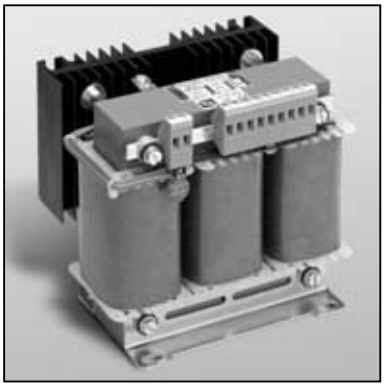

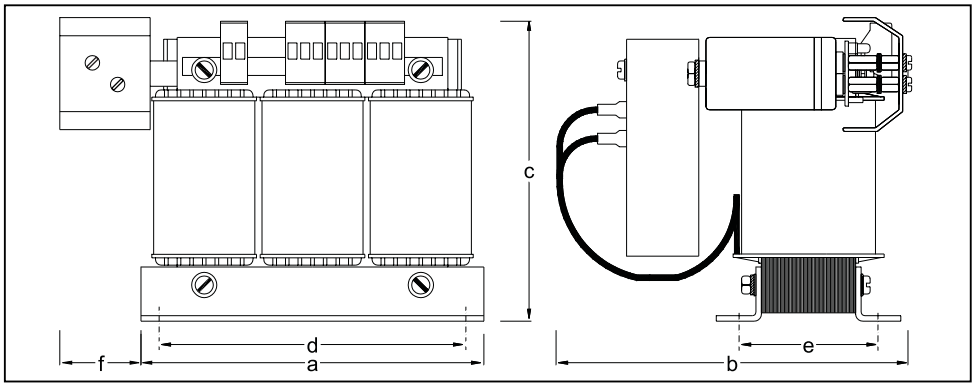

Model	Current	3x 380/400/420 V 24 VDC without capacitor	3x 380/400/420 V 24 VDC with capacitor	Copper weight	Total weight	Approx. dimensions in mm						
	A DC	Article-no.	Article-no.	kg	kg	a	b	c	d	e	f	Attachment
RDRK 2,5	2,5	21–400–024–01	21–400–024–K01	0,70	2,50	130	75	160	84	46	45	M 5
RDRK 5	5	21–400–024–01	21–400–024–K02	0,80	3,00	130	85	165	84	56	45	M 5
RDRK 7,5	7,5	21–400–024–03	21–400–024–K03	1,20	4,40	155	70	195	90	55	55	M 5
RDRK 10	10	21–400–024–04	21–400–024–K04	1,40	6,00	155	85	195	90	70	55	M 5
RDRK 16	16	21–400–024–05	21–400–024–K05	2,30	7,00	190	170	165	128	72	60	M 6
RDRK 20	20	21–400–024–06	21–400–024–K06	2,50	8,40	190	180	165	128	82	60	M 6
RDRK 25	25	21–400–024–07	21–400–024–K07	3,00	11,30	190	190	165	128	92	70	M 6
RDRK 30	30	21–400–024–08	21–400–024–K08	4,00	11,40	190	190	165	128	92	70	M 6
RDRK 40	40	21–400–024–09	21–400–024–K09	4,80	17,10	230	190	210	176	71	-	M 6
RDRK 60	60	21–400–024–10	21–400–024–K10	5,00	21,00	290	200	240	190	120	85	M 10

Subject to technical modifications

Standard stock items

Three-phase compact rectifier transformers

Safety transformers **comp. VDE 0570 part 2-6, EN 61558-2-6**

RDRKL 10 – 120

Standard version: with connected three-phase bridge rectifier,
input 3 x 380/400/420 V, output 24 VDC, residual ripple < 5%

Capacitor version: with connected three-phase bridge rectifier and capacitor
input 3 x 380/400/420 V, output 24 VDC, residual ripple < 2%

Series RDRKL, just like RDRK, has been developed specially for application with programmable logic controllers (PLC). The transformers are well dimensioned and voltage stable allowing for particular flat characteristic between no-load and load. Over- or undervoltages, critical for PLC's, do not occur even at increased mains voltage fluctuations.

Series RDRKL is equipped with strongly oversized profile heat sinks that guarantee intensified heat dissipation. Its rectifiers are protected against temporary current surges and voltage spikes.

The capacitor version is protected via a mini circuit board containing a matching varistor, foil capacitor and discharge resistor.

Harmonic rule EN 61000-3-2 is observed.

Design: Open horizontal design, stationary, for installation and set-up in dry rooms, separate windings, sturdy mounting brackets. All connections to non-tracking terminal blocks with screw connections. The terminals are protected against finger touch or contact with the back of the hand in compliance to accident prevention regulations (VBG 4).

IP 00, suitable for installation up to protection rating IP 23, insulation class E, max. ambient temperature ta40°C, color grey, heat sink black anodized.

The capacitor version shows slight diversions from stated measurements but attachments remain the same.

Further designs available on request (fuses, voltages, connections, etc.)

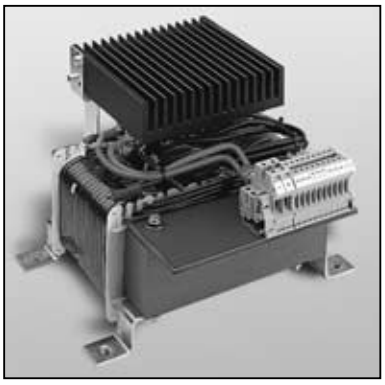

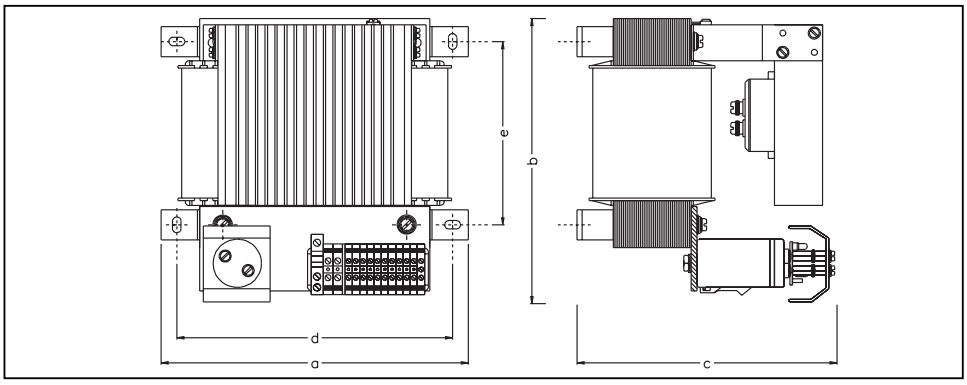

Model	Current	3x 380/400/420 V 24 VDC without capacitor	3x 380/400/420 V 24 VDC with capacitor	Copper weight	Total weight	Approx. dimensions in mm					
	A DC	Article-no.	Article-no.	kg	kg	a	b	c	d	e	Attachment
RDRKL 10	10	22–400–024–01	22–400–024–K01	1,4	6,0	156	165	160	140	100	M 5
RDRKL 16	16	22–400–024–02	22–400–024–K02	2,5	8,6	206	200	190	184	120	M 6
RDRKL 20	20	22–400–024–03	22–400–024–K03	2,8	10,4	206	200	200	184	120	M 6
RDRKL 25	25	22–400–024–04	22–400–024–K04	3,0	10,8	206	200	200	184	120	M 6
RDRKL 30	30	22–400–024–05	22–400–024–K05	4,0	11,0	206	220	200	184	120	M 6
RDRKL 40	40	22–400–024–06	22–400–024–K06	5,8	22,0	254	240	230	228	152	M 6
RDRKL 60	60	22–400–024–07	22–400–024–K07	6,6	25,0	290	260	230	258	160	M 8
RDRKL 90	90	22–400–024–08	22–400–024–K08	10,5	38,0	300	300	240	258	176	M 8
RDRKL 120	120	22–400–024–09	22–400–024–K09	13,5	43,0	380	325	240	298	200	M 8

Standard stock items

Subject to technical modifications

Three-phase-universal-compact-rectifier transformers

Safety transformers **comp. VDE 0570 part 2-6, EN 61558-2-6**

RDRKU 5 – 25

with connected three-phase bridge rectifier and capacitor

Interchangeable input connections:

3 x 210/220/230/240/255/265/275/290/300/
360/380/400/420/440/460/480/500/520 V

Output 24 V DC, residual ripple < 2%.

Design:

Open design, stationary, for installation and set-p in dry rooms, separate windings, sturdy mounting brackets. Connection to non-tracking transformer terminals with screw- and tab connection 2.8 x 0.8 mm up to 5 A, and 6.3 x 0.8 mm up to 20 A.. According to DIN 46249, the tab connection 2.8 x 0.8 mm can only be loaded up to 5 A, and the 6.3 x 0.8 up to 20 A. The terminals are protected against finger touch or contact with the back of the hand in compliance to accident prevention regulations (VBG 4).

IP 00, suitable for installation up to protection rating IP 23, insulation class E, max. ambient temperature ta 40°C.

Harmonic rule EN 61000-3-2 is observed.

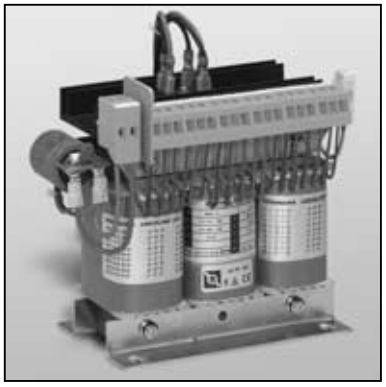

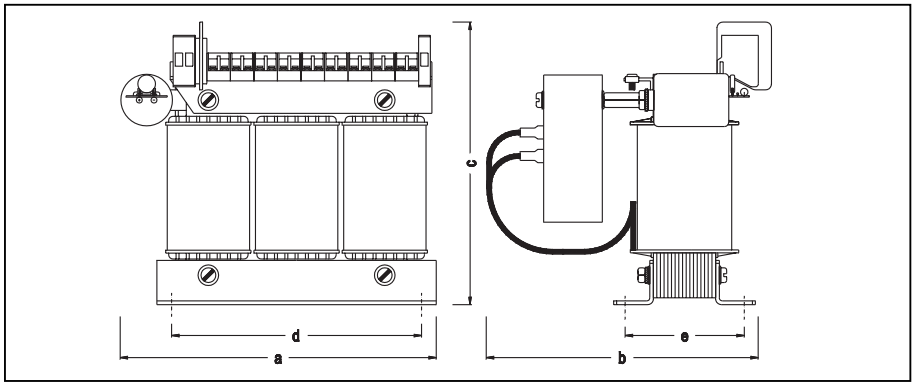

Model	Current	Size	3x 210–520 V 24 VDC	Copper weight	Total weight	Approx. dimensions in mm					
	A DC		Article-no.	kg	kg	a	b	c	d	e	Attachment
RDRKU 5	5	3 UI 75/26	22–400–U–01	1,5	4,9	200	90	195	130	57	M 6
RDRKU 10	10	3 UI 75/41	22–400–U–02	2,0	7,0	200	115	195	130	72	M 6
RDRKU 15	15	3 UI 90/41	22–400–U–03	3,0	8,0	230	175	195	170	68	M 6
RDRKU 20	20	3 UI 90/51	22–400–U–04	3,5	11,5	230	195	195	170	78	M 6
RDRKU 25	25	3 UI 90/51	22–400–U–05	4,0	12,0	230	195	195	170	78	M 6

Three-phase compact rectifier transformers

Safety transformers **comp. VDE 0570 part 2-6, EN 61558-2-6**

RDRKN 10 – 60

Standard version: with connected three-phase bridge rectifier
input 3x 380/400/420 V, output 24 VDC, residual ripple < 5 %

Capacitor version: with connected three-phase bridge rectifier and capacitor
input 3x 380/400/420 V, output 24 VDC, residual ripple < 2 %

Design: Closed design, stationary, for installation and set-up in dry rooms, separate windings, sturdy mounting brackets. Connection to non-tracking transformer terminals with screw connection. The terminals are protected against finger touch or contact with the back of the hand in compliance to accident prevention regulations (VBG 4).

Harmonic rule EN 61000-3-2 is observed.

IP 00, suitable for installation up to protection rating IP 23, insulation class E, max. ambient temperature ta 40°C.

Merits: Core loss reduction by two-way lamination, safeguarded against short cut via insulated bushings, low voltage drop (no-load - load operation), low total losses, temperature reserves - full load capacity even at ta 60°C/E, high output at short-time duty, mounting brackets comp. to DIN 41307, attachment dimensions comp. to DIN 41308.

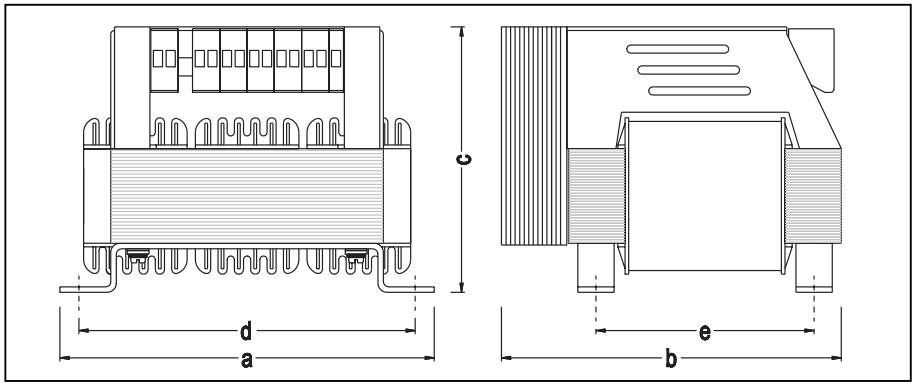

Standard version:

Model	Current	3×380/400/420 V 24 V DC	Copper weight	Total weight	Approx. dimensions in mm					
	ADC	Article-no.	kg	kg	a	b	c	d	e	Attachment
RDRKN 10	10	28–400–024–01	1,6	4,9	156	165	110	140	100	M 5
RDRKN 16	16	28–400–024–02	1,9	6,5	156	165	125	140	100	M 5
RDRKN 20	20	28–400–024–03	2,4	9,8	206	190	140	184	120	M 6
RDRKN 25	25	28–400–024–04	3,2	10,7	206	200	160	184	120	M 6
RDRKN 30	30	28–400–024–05	3,9	11,5	206	200	160	184	120	M 6
RDRKN 40	40	28–400–024–06	6,0	17,0	254	235	155	228	152	M 6
RDRKN 60	60	28–400–024–07	6,9	22,0	254	235	180	228	152	M 6

Capacitor version:

Model	Current	3×380/400/420 V 24 V DC	Copper weight	Total weight	Approx. dimensions in mm					
	ADC	Article-no.	kg	kg	a	b	c	d	e	Attachment
RDRKN 10 K	10	28–400–024–K 01	1,6	4,9	156	165	110	140	100	M 5
RDRKN 16 K	16	28–400–024–K 02	1,9	6,5	156	165	125	140	100	M 5
RDRKN 20 K	20	28–400–024–K 03	2,4	9,8	206	190	140	184	120	M 6
RDRKN 25 K	25	28–400–024–K 04	3,2	10,7	206	200	160	184	120	M 6
RDRKN 30 K	30	28–400–024–K 05	3,9	11,5	206	200	160	184	120	M 6
RDRKN 40 K	40	28–400–024–K 06	6,0	17,0	254	235	155	228	152	M 6
RDRKN 60 K	60	28–400–024–K 07	6,9	22,0	254	235	180	228	152	M 6

Standard stock items **(K) - capacitor version** Subject to technical modifications

Three-phase compact rectifier transformers

Safety transformers comp. VDE 0570 part 2-6, EN 61558-2-6

RDRKS 7,5 – 30

Circuit diagram standard version:

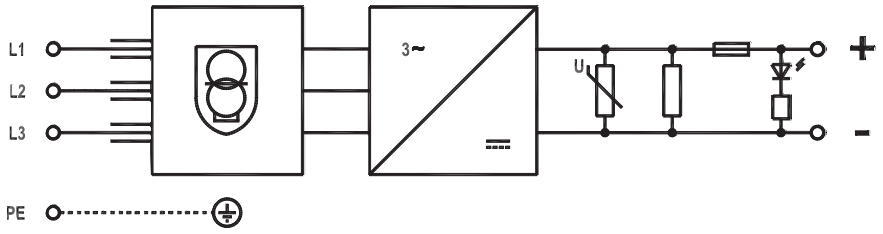

Circuit diagram capacitor version:

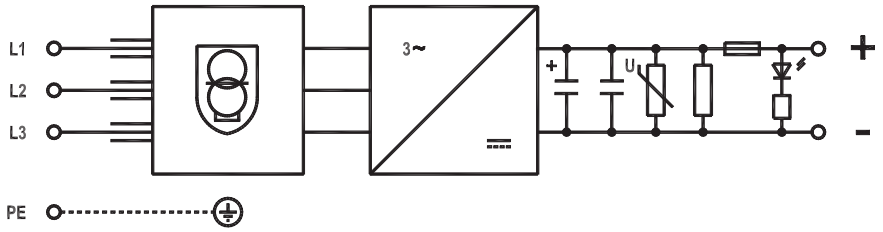

Top view and terminal assignment:

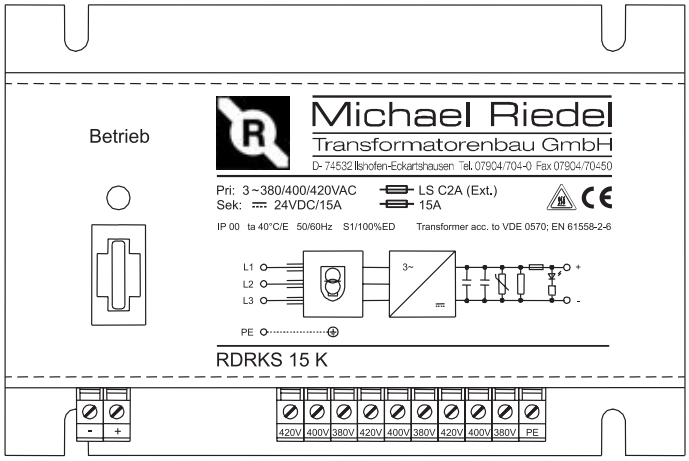

Fuses:

Model	Current input	Fusing input	Current output	Fusing output	η
	A	A	A	A	%
RDRKS 7,5	0,36	LS C1	7,5	7,5	76,0
RDRKS 10	0,47	LS C1	10,0	10,0	77,4
RDRKS 15	0,70	LS C2	15,0	15,0	76,6
RDRKS 20	0,94	LS C4	20,0	20,0	77,4
RDRKS 30	1,35	LS C6	30,0	30,0	80,9

Weights and order nos.:

Model	Copper weight	Total weight	Losses	3 x 380/400/420V 24VDC without capacitor	3 x 380/400/420V 24VDC with capacitor
	kg	kg	W	Article no.	Article no.
RDRKS 7,5 (K)	1,2	3,8	57	0256-400-24-01	0257-400-24-K01
RDRKS 10 (K)	1,6	4,4	70	0256-400-24-02	0257-400-24-K02
RDRKS 15 (K)	1,8	6,3	110	0256-400-24-03	0257-400-24-K03
RDRKS 20 (K)	2,4	9,0	140	0256-400-24-04	0257-400-24-K04
RDRKS 30 (K)	3,9	11,5	170	0256-400-24-05	0257-400-24-K05

Subject to technical modifications

(K)-capacitor version

Standard stock items

Three-phase compact rectifier transformers

Safety transformers **comp. VDE 0570 part 2-6, EN 61558-2-6**

RDRKS 7,5 – 30

In general:

Series RDRKS in modern industrial design, meets national, international and upcoming regulations. It was designed bearing following aspects in mind:

- optimal layout to reduce surface area
- simple mounting via open-ended slot
- compact construction and low weight
- high reliability and long service life
- good value for agreeable price
- low total losses

Design:

Covered, stationary, for installation and set-up in dry rooms, separate windings, open-ended mounting slot integrated in cover. Connection to non-tracking transformer terminals with screw connection. Terminals are protected against finger touch or contact with the back of the hand in compliance to accident prevention regulations (VBG 4).

Technical data:

Input: 3 x 380/400/420 V

Output: 24 VDC with connected three-phase bridge rectifier, varistor, resistor, LED, universal blade fuse, residual ripple < 5% **or**
24 VDC with connected three-phase bridge rectifier, varistor, resistor, LED, universal blade fuse, electrolyte capacitor, residual ripple < 2% (**capacitor version**).

Harmonic rule EN 61000-3-2 is observed.

Test voltage: between input and output circuit 4467V, 50 Hz

Design: IP 00, suitable for installation up to protection rating IP 23, insulation class E, max. ambient temperature ta 40°C

Other voltages available on request.

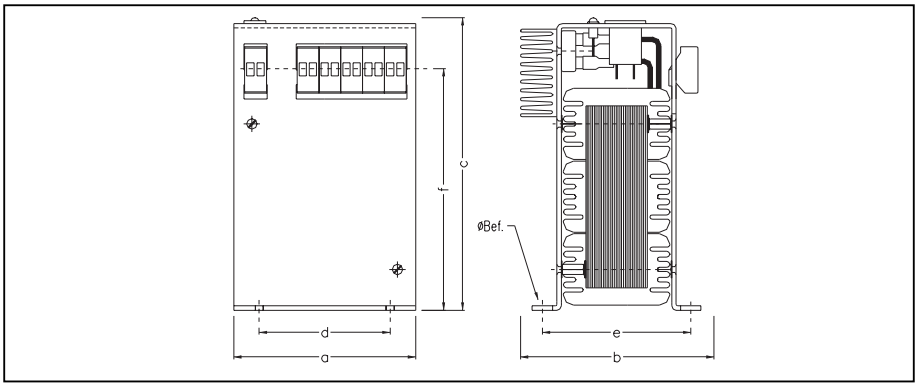

Standard version:

Model	Current	3 x 380/400/420 V 24 V DC	3 x 380/400/420 V 24 V DC	Approx. dimensions in mm						
	ADC	Article no.	Article no. (K)	a	b	c	d	e	f	Attachment
RDRKS 7,5 (K)	7,5	0256-400-24-01	0257-400-24-K01	125	105	200	90	90	165	M 5
RDRKS 10 (K)	10	0256-400-24-02	0257-400-24-K02	125	105	200	90	90	165	M 5
RDRKS 15 (K)	15	0256-400-24-03	0257-400-24-K03	125	130	200	90	115	165	M 5
RDRKS 20 (K)	20	0256-400-24-04	0257-400-24-K04	190	130	200	150	115	165	M 6
RDRKS 30 (K)	30	0256-400-24-05	0257-400-24-K05	190	165	200	150	135	165	M 6

Standard stock items **(K) - capacitor version** Subject to technical modifications

Three-phase compact rectifier transformers

Safety transformers **comp. VDE 0570 part 2-6, EN 61558-2-6**

RDRKG 5 – 60

Irrespective of operation mode, series RDRKG remains well below the limit values for rated voltage 24 V DC, laid down in EN61131-2 / part 2 (D.C. power supplies for electronic control units). It even applies for mains fluctuations of + 6% / -10% acc. to DIN IEC 38. Generously dimensioned electrolytic capacitors achieve a minimal residual ripple of ≤ 2% required for exacting demands. Consumers are comprehensively protected against interference voltage spikes, overvoltage, HF interference voltages and capacitor residual charges. All models of series RDRKG are manufactured with high performance ICs in hybrid technology on aluminum-oxide ceramic-basis and are fused on output side.

Harmonic rule EN 61000-3-2 is observed.

Units RDRKG 5 - 10 are protected by quick safety fuses and from 16 A upwards with high-performance automatic circuit breakers comp. to VDE 0660 Part 104 featuring thermal release for overload protection and electromagnetic instantaneous trip for short-circuits.

The compact power packs of series RDRKG base on transformers comp. VDE 0570. They meet the requirements for protection against electric shock comp. to DIN VDE 0106 Part 101.

The safe separation of protection low voltage (SELV)- and functional low voltage (FELV)- circuits from other circuits is thereby ensured.

Developed for "worst case"-conditions, these units are way above rating and can be operated in any position at ta 60°C.

The sensitive parts are encased in well-ventilated housings.

Design:

Closed design, stationary, for installation and set-up in dry rooms, separate windings, sturdy mounting brackets. Connections to non-tracking terminal blocks with screw connections. The terminals are protected against finger touch or contact with the back of the hand in compliance to accident prevention regulations (VBG 4).

Input 3 x 380/400/420 V
Output 24 VDC, residual ripple < 2%

IP 00, suitable for installation up to protection rating IP 23, insulation class E, max. ambient temperature ta 60°C.

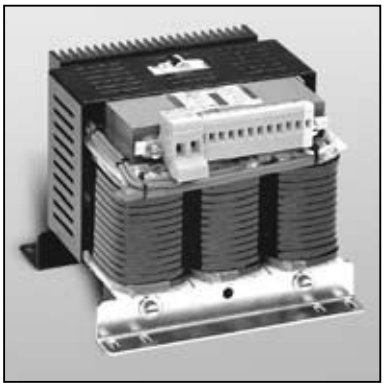

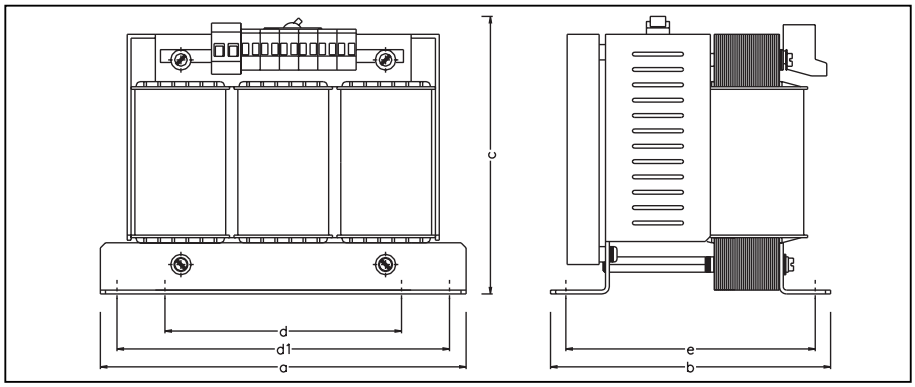

Model	Current	3x 380/400/420 V 24 V DC	Copper weight	Total weight	Approx. dimensions in mm						
	A DC	Article-no.	kg	kg	a	b	c	d 1	d	e	Befestigung
RDRKG 5	5	21–400–024–G 2	0,80	3,30	145	85	157	135	90	50	M 5
RDRKG 7,5	7,5	21–400–024–G 3	1,20	4,50	180	105	190	170	113	50	M 5
RDRKG 10	10	21–400–024–G 4	1,40	5,50	180	105	190	170	113	64	M 5
RDRKG 16	16	21–400–024–G 5	2,50	7,80	200	200	175	185	134	166	M 6
RDRKG 20	20	21–400–024–G 6	2,80	11,30	200	210	175	185	134	176	M 6
RDRKG 25	25	21–400–024–G 7	3,00	11,80	200	210	175	185	134	176	M 6
RDRKG 30	30	21–400–024–G 8	4,00	14,00	200	210	175	185	134	176	M 6
RDRKG 40	40	21–400–024–G 9	5,80	23,00	285	220	220	260	185	195	M 8
RDRKG 60	60	21–400–024–G 10	6,60	25,00	285	234	220	260	185	210	M 8

Subject to technical modifications

Standard stock items

Three-phase switch power packs, secondary switched

Three-phase safety transformers **comp. VDE 0570 part 2-6, EN 61558-2-6**

Noise transmission EN 55011 class B (industry), EN 55022 class B (Telecom)

RSNT 20 – 60 G regulated

The switch power packs of series RSNT 20–60 G are assembled with three-phase isolating transformers and subsequent switching controllers. They remain well below the permissible interference levels defined in VDE 0875 Part 11, EN 55011 limit curve B.
The patented switching concept ensures an extremely low interference level. There is no need for filtering or shielding whatsoever.

The switch power packs are overload and short circuit proof and can be connected in parallel without restriction. An internal electronic fuse ensures that units are always operated within safe operating range (SOA protection).

Two LEDs indicate momentary operation mode, green for constant voltage and yellow for constant current mode.

Design: Robust steel housing with integrated mounting holes, for installation and set-up in dry rooms. Primary, secondary and ground connection via protruded, non-tracking terminal blocks with screw connections. The terminals are protected against finger touch or contact with the back of the hand in compliance to accident prevention regulations (VBG 4).

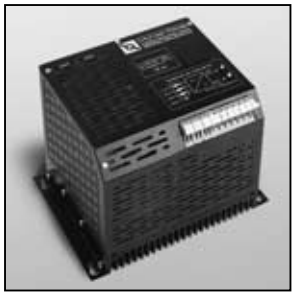

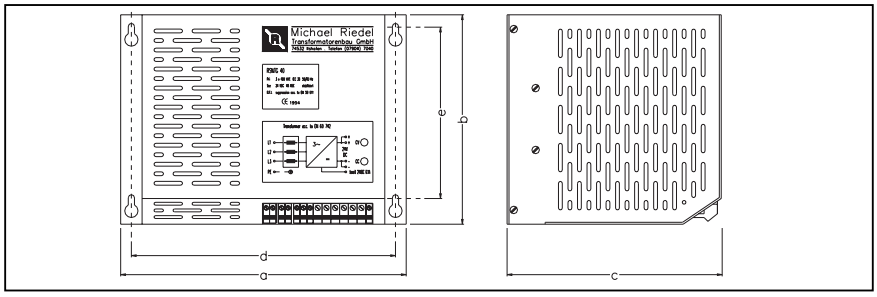

Technical data for model	RSNT 20G	RSNT 30G	RSNT 40G	RSNT 50G	RSNT 60G
Input					
Mains input voltage	3 x AC 400 V				
Mains input voltage range	+ 15 % to – 15 %				
Frequency	50 Hz/60 Hz				
Input current	1,3 A	2,0 A	2,6 A	3,2 A	3,7 A
Input fuses	external (thermal-magnetic overload release)				
Output					
Output voltage	DC 24 V stabilized, twin terminals, externally adjustable 0... DC30 V				
Status display	LED green / yellow (U / I)				
Ready signal (terminal B)	DC 24V / max. load DC 0.1A when unit is in constant voltage mode				
Adjustable output current	0...20 A	0...30 A	0...40 A	0...50 A	0...60 A
Residual ripple	< 30 mV RMS				
Short-circuit protection	constant current operation				
Load stabilization dynamic	< 100 mVss / 500µs.				
Stability under constant conditions	< 0,05 %				
Mains stabilization	< 0,05 %				
Overtemperature protection	thermal switch-off when overtemperature > 85°C				
RFI suppression	VDE 0875 / EN 55011				
Ambient temperature	-10... +40°C				
General data					
Test voltage transformer	between input and output circuit comp. to regulations (safety transformer)				
Directives	VDE 0570 part 2-6, EN 61558-2-6, EN 61000-3-2, EN 61131-2/part 2				
CE mark	yes				
Installation orientation	vertical				
Cooling	convection			forced air	
Type of connection	screw-type terminal, finger-safe comp. to VBG4				
Connection data	fine strand, max. 4 / 10 mm^2			fine strand, max. 4 / 16 mm^2	
Mounting	mounting brackets with keyhole attachment				
Protection rating comp. DIN 0470 / EN 60529	IP 20				
Safety class comp. IEC 536 / VDE 0106 part 1	I				
Insulation class	E				
Dimensions in mm approx. (a x b x c)	250 x 202 x 200		300 x 220 x 222	330 x 250 x 237	
Mounting template in mm approx. (d x e)	228 x 161		278 x 179	308 x 209	
Article no.	24-400-SNT-01-G	24-400-SNT-02-G	24-400-SNT-03-G	24-400-SNT-04-G	24-400-SNT-05-G
Copper weight in kg	3,4	3,8	5,8	8,5	8,5
Total weight in kg	13,0	21,0	22,5	25,0	26,5
Options					
Remote control 0 - 10V	for U / I				
Remote control 4mA - 20mA	for U / I				
Switch-off input	to take unit out of service connect terminal with 0V				
Zero potential contact for centralized alarm	for trouble (overtemperature, undervoltage and overload)				

Standard stock items

Subject to technical modifications

Primary switched three-phase switch power packs

RPL 2420 D and 2440 D comp. VDE 0570 part 2-17, EN 61558-2-17, EN 60950 class 1

Noise transmission EN 55011 class B (industry), EN 55022 class B (Telecom)

regulated

application as D.C./D.C.-converter possible

RPL 2420 D

RPL 2440 D

Features:

- application as power pack, battery charger or D.C./D.C.-converter
- output voltage 24 VDC, adjustable over a wide range
- connection in parallel or series
- high efficiency
- input 3 x 400 VAC
- PFC comp. to EN 61000-3-2
- compact and robust construction in metal housing
- easy installation on DIN mounting rail, alternatively screw fastening
- safety class I
- noise transmission EN 50081-1, EN 55011 class B **(industry)**, EN 55022 class B **(Telecom)**
- noise immunity EN 50082-2: ESD, electromagnetic irradiation, burst, conducted interference immunity, mains voltage dips
- overcurrent limiter and short-circuit proofing
- overtemperature protection
- inrush current limiter, enabling the use of conventional thermo-magnetic circuit breakers with B- characteristic
- overvoltage limiter
- electronic overvoltage limiter
- status display: LED
- ambient temperature 0°C...+ 55°C without power reduction

Power packs:

Model	Output voltage		Output current	Article no.
	rated voltage (VDC)	setting range (VDC)	ADC	
RPL 2420 D	24	23...29	20,0	0505-0002420D
RPL 2440 D	24	23...28	40,0	0505-0002440D

Developments in process:

- units with higher performance up to app. 1500 W with three-phase supply
- units with multiple output voltages

Primary switched three-phase switch power packs

RPL 2420 D and 2440 D comp. VDE 0570 part 2-17, EN 61558-2-17, EN 60950 class 1

Noise transmission EN 55011 class B (industry), EN 55022 class B (Telecom)

regulated

application as D.C./D.C.-converter possible

Technical data for model class	**480W**	**960W**
Model	**RPL 2420 D**	**RPL 2440 D**
INPUT		
Rated input voltage, U1 rated	AC 3 x 400V	AC 3 x 400V
Voltage range, U1min - U1max	AC 340-460V or DC 450V-740V	AC 340-460V or DC 450V-740V
Frequency	45-65 Hz	45-65 Hz
Overvoltage protection	varistor AC 550V	varistor AC 550V
Rated current typical, I1 rated	1,1A at 400VAC	1,9A at 400VAC
Maximum transient pulse Ta=25°C	< 26A at 400VAC	< 18A at 400VAC
Maximum transient pulse Ta=55°C	< 71A at 400VAC	< 52A at 400VAC
Internal fuse	-	-
Recommended external fuse	power circuit breaker B10, B16	power circuit breaker B10, B16
Maximum switching rate	30 switching cycles per hour	30 switching cycles per hour
Bypass power-line failure	> 20ms at 400VAC	> 20ms at 400VAC
Reverse polarity protection D.C.-input	yes	yes
OUTPUT		
Rated voltage U2 rated D.C	24V	24V
Voltage range U2 min - U2 max D.C.	adjustable 23-29V	adjustable 23-28V
Rated current I2 (at U2 rated)	20.0A	40.0A
Protection overload, short circuit, no-load	yes	yes
Overcurrent limit typical	20.5A	40.5A
Short circuit current typical	< 22A	< 45A
Overvoltage protection	yes	yes
Residual ripple f=20Hz...300kHz, Ta=25°C	< 60mV RMS	< 60mV RMS
Mains stabilization U1min - U1max	< 0,05 %	< 0,05 %
Load stabilization load alteration 10% <-> 90%	< 0,25%	< 0,25%
Overshoot/control time load leap 10% <-> 90%"	< 3.0% < 3ms	< 3.0% < 3ms
Temp. stability	< 0,02% / K	< 0,02% / K
Operation in parallel and series	yes	yes
Status reports	LED green	LED green
Noise output zero potential change-over contact	optional	optional
Temperature compensation (battery charger) external NTC-resistor	optional	optional
DIRECTIVES		
Mains harmonics limit EN 61000-3-2	yes	yes
Noise transmission	EN 550081-1, EN 55011 class B, EN 55022 class B	EN 550081-1, EN 55011 class B, EN 55022 class B
Interference immunity	EN 50082-2	EN 50082-2
Safety	EN 60950 class I	EN 60950 class I
Test voltage input/housing	3750VAC RMS 50Hz, 1min	3750VAC RMS 50Hz, 1min
Test voltage input/output	3750VAC RMS 50Hz, 1min	3750VAC RMS 50Hz, 1min
Test voltage output/housing	500VDC	500VDC
Humidity	85% RH IEC 68-2-30	85% RH IEC 68-2-30
Vibration and shock	ETS 300 019-2-4, class 4M5	ETS 300 019-2-4, class 4M5
CE mark	yes	yes
OPERATING DETAILS		
Efficiency typical	> 92% at 400VAC and 100%-load	> 94% at 400VAC and 100%-load
Protection rating comp. VDE 0470 / EN 60529	IP 20	IP 20
Protection class comp. IEC 536, VDE 0106 T1	I	I
Overtemperature protection	yes	yes
Ambient temperature	0 up to +55°C	0 up to +55°C
Storage temperature	-24°C up to +85°C	-24°C up to +85°C
Cooling	free convection	free convection
MECHANICS		
Connection input voltage	connector RM7,62mm to screw 4-pole 0,75-2,5mm² (L1/L2/L3/PE) **for D.C./D.C.-converter: + on L1, - on L2**	connector RM7,62mm to screw 4-pole 0,75-2,5mm² (L1/L2/L3/PE) **for D.C./D.C.-converter: + on L1, - on L2**
Connection output voltage	connector RM7,62mm to screw 4-pole 0,75-4,0mm² (+ + - -)	print terminal RM10, 16mm to screw 4-pole 0,75-10,0mm² (+ + - -)
Connection noise output and temperature compensation	optional	optional
Housing design	aluminum / steel	aluminum / steel
Mounting	snap-on onto mounting rail DIN EN 50022	snap-on onto mounting rail DIN EN 50022
Installation orientation	front plate horizontal, connections below	front plate horizontal, connections below
Approx. dimensions in mm (W x H x D)	245 x 138 x 100 mm	ca. 285 x 174 x 110 (mm)
Approx. total weight	2,2kg	ca. 3,3kg

Standard stock items

Subject to technical modifications

Three-phase IU battery chargers

RLSN 1220 – 2460 comp. VDE 0570 part 2-6, EN 61558-2-6

Noise transmission EN 55011 class B (industry), EN 55022 class B (Telecom)

The IU charging method combined with our patented switching concept is particularly efficient for lead acid batteries because it is best adapted to their charging characteristic.

The service life of maintenance-free lead acid batteries increases considerably by this gentle charging method. Two LEDs indicate operation modes. Buffer-battery operation is fully guaranteed.

Battery chargers series RLSN are enclosed in a plastic coated steel housing providing comprehensive protection against accidental contact. The battery chargers in modern industrial design fulfill safety requirements for protection against electric shock comp. to VDE 0106 part 101.

RLSN 2420 **RLSN 2440** **RLSN 2460**

Technical data for model	RLSN 1220	RLSN 2420	RLSN 1240	RLSN 2440	RLSN 1260	RLSN 2460
Input						
Mains input voltage	AC 3x 400V					
Mains input voltage range	+ 15 % to - 15 %					
Frequency	50Hz / 60Hz					
Input fuses	external (thermal/magnetic overload release)					
Input current	1,3 A	1,3 A	2,6 A	2,6 A	3,7 A	3,7 A
Output						
Battery rated voltage	DC 12 V	DC 24 V	DC 12 V	DC 24 V	DC 12 V	DC 24 V
Max. charge current	DC 20A	DC 20A	DC 40A	DC 40A	DC 60A	DC 60A
Battery type	all types of lead acid batteries					
Status display yellow LEDs green	constant current mode constant voltage mode					
Residual ripple of charge current	< 0,5%					
Charging characteristic	IU					
Overload protection	internal electronic current limiter					
Reverse current	when mains off, I =< 30mA					
Overtemperature protection	automatic cut-off with reset at overtemperature					
RFI suppression	better than VDE 0871, limit curve B / EN 55 011					
Temperature range	-10° C to + 40° C					
Efficiency	>90%					
General data						
Transformer test voltage	between input and output comp. to regulation (safety transformers)					
Directives	VDE 0570 part 2-6, EN 61558-2-6, EN 61000-3-2, EN 61131-2/part 2					
CE mark	yes					
Installation orientation	cooling fins vertical					
Cooling	convection				Zwangskühlung	
Type of connection	terminal blocks (protected against finger touch comp. UVV (VBG 4)					
Connection data	fine strand primary max. 4 mm² secondary max. 10 mm²		fine strand primary max. 4 mm² secondary max. 10 mm²		fine strand primary max. 4 mm² secondary max. 16 mm²	
Mounting	integrated mounting brackets with keyhole attachment					
Protection rating	(VDE 0470 / EN 60529) IP 20					
Safety class	I					
Insulation class	E					
Dimensions in mm approx. (Length/Width/Height)	250 / 202 / 200		300 / 220 / 222		330 / 250 / 237	
Mounting template in mm approx.	228 / 161		278 / 179		308 / 209	
Article no.	0234-400-012-01	0233-400-024-01	0234-400-012-02	0233-400-024-02	0234-400-012-03	0233-400-024-03
Copper-weight in kg	3,4		5,8		8,5	
Weight in kg	13,0		22,5		26,5	

Subject to technical modifications

Standard stock items

Primary switched three-phase battery chargers

RPL 2420 DL and 2440 DL comp. VDE 0570 part 2-17, EN 61558-2-17, EN 60950 class 1

Noise transmission EN 55011 class B (industry), EN 55022 class B (Telecom)

regulated

application as D.C./D.C.-converter possible

RPL 2420 DL

RPL 2440 DL

Features:

- application as power pack, battery charger or D.C./D.C.-converter
- output voltage 24 VDC, adjustable over a wide range
- connection in parallel or series
- high efficiency
- input 3 x 400 VAC
- PFC comp. to EN 61000-3-2
- compact and robust construction in metal housing
- easy installation on DIN mounting rail, alternatively screw fastening
- safety class I
- noise transmission EN 50081-1, EN 55011 class B **(industry)**, EN 55022 class B **(Telecom)**
- interference immunity EN 50082-2: ESD, electromagnetic irradiation, burst, conducted interference immunity, mains voltage dips
- overcurrent limiter and short-circuit proofing
- overtemperature protection
- inrush current limiter, enabling the use of conventional thermo-magnetic circuit breakers with B- characteristic
- overvoltage limiter
- electronic overvoltage limiter
- status display: LED
- ambient temperature 0°C...+ 55°C without power reduction

Battery chargers:

Model	Output voltage		Output current	Article no.
	Rated voltage (VDC)	setting range (VDC)	ADC	
RPL 2420 DL	27,4	23...29	20,0	0525-002420DL
RPL 2440 DL	27,4	23...28	40,0	0525-002440DL

Developments in process:

- units with higher performance up to app. 1500 W with three-phase supply
- units with multiple output voltages

Primary switched three-phase battery chargers

RPL 2420 DL and 2440 DL comp. VDE 0570 part 2-17, EN 61558-2-17, EN 60950 class 1

Noise transmission EN 55011 class B (industry), EN 55022 class B (Telecom)

regulated

application as D.C./D.C.-converter possible

Technical data for model class	**480W**	**960W**
Model	**RPL 2420 DL**	**RPL 2440 DL**
INPUT		
Rated input voltage, U1 rated	AC 3 x 400V	AC 3 x 400V
Voltage range, U1min-U1max	AC 340-460V or DC 450V-740V	AC 340-460V or DC 450V-740V
Frequency	45-65 Hz	45-65 Hz
Overvoltage protection	varistor AC 550V	varistor AC 550V
Rated current typical, I1 rated	1,1A at 400VAC	1,9A at 400VAC
Maximum transient pulse Ta=25°C	< 26A at 400VAC	< 18A at 400VAC
Maximum transient pulse Ta=55°C	< 71A at 400VAC	< 52A at 400VAC
Internal fuse	-	-
Recommended external fuse	power circuit breaker B10, B16	power circuit breaker B10, B16
Maximum switching rate	30 switching cycles per hour	30 switching cycles per hour
Bypass power-line failure	> 20ms at 400VAC	> 20ms at 400VAC
Reverse polarity protection D.C.-input	yes	yes
OUTPUT		
Rated voltage U2 rated D.C.	27,4V	27,4V
Voltage range U2min - U2max D.C.	adjustable 23-29 V	adjustable 23-28 V
Rated current I2 (at U2 rated)	18.0A	38.0A
Protection overload, short circuit, no-load	yes	yes
Overcurrent limit typical	18.0A	38.5A
Short circuit current typical	< 22A	< 45A
Overvoltage protection	yes	yes
Residual ripple f=20Hz...300kHz, Ta=25°C	< 60mV RMS	< 60mV RMS
Mains stabilization U1min - U1max	< 0,05 %	< 0,05 %
Load stabilization load alteration 10% <-> 90%	< 0,25%	< 0,25%
Overshoot/control time load leap 10% <-> 90%"	< 3.0% < 3ms	< 3.0% < 3ms
Temp. stability	< 0,02% / K	< 0,02% / K
Operation in parallel and series	yes	yes
Status reports	LED green	LED green
Noise output zero potential change-over contact	optional	optional
Temperature compensation (battery charger) external NTC-resistor	optional	optional
DIRECTIVES		
Mains harmonics limit EN 61000-3-2	yes	yes
Noise transmission	EN 550081-1, EN 55011 class B, EN 55022 class B	EN 550081-1, EN 55011 class B, EN 55022 class B
Interference immunity	EN 50082-2	EN 50082-2
Safety	EN 60950 class I	EN 60950 class I
Test voltage input/housing	3750VAC RMS 50Hz, 1min	3750VAC RMS 50Hz, 1min
Test voltage input/output	3750VAC RMS 50Hz, 1min	3750VAC RMS 50Hz, 1min
Test voltage output/housing	500VDC	500VDC
Humidity	85% RH IEC 68-2-30	85% RH IEC 68-2-30
Vibration and shock	ETS 300 019-2-4, class 4M5	ETS 300 019-2-4, class 4M5
CE mark	yes	yes
OPERATING DETAILS		
Efficiency typical	> 92% at 400VAC and 100%-load	> 94% at 400VAC and 100%-load
Protection rating comp. VDE 0470 / EN 60529	IP 20	IP 20
Protection class comp. IEC 536, VDE 0106 T1	I	I
Overtemperature protection	yes	yes
Ambient temperature	0 bis +55°C	0 bis +55°C
Storage temperature	-24°C up to +85°C	-24°C up to +85°C
Cooling	free convection	free convection
MECHANICS		
Connection input voltage	connector RM7,62mm to screw 4-pole 0,75-2,5mm² (L1/L2/L3/PE) **for D.C./D.C.-converter: + on L1, - on L2**	connector RM7,62mm to screw 4-pole 0,75-2,5mm² (L1/L2/L3/PE) **for D.C./D.C.-converter: + on L1, - on L2**
Connection output voltage	connector RM7,62mm to screw 4-pole 0,75-4,0mm² (+ + - -)	print terminal RM10, 16mm to screw 4-pole 0,75-10,0mm² (+ + - -)
Connection noise output and temperature compensation	optional	optional
Housing design	aluminum / steel	aluminum / steel
Mounting	snap-on onto mounting rail DIN EN 50022	snap-on onto mounting rail DIN EN 50022
Installation orientation	front plate horizontal, connections below	front plate horizontal, connections below
Approx. dimensions in mm (WxHxD)	245 x 138 x 100 mm	ca. 285 x 174 x 110 (mm)
Approx. total weight	2,2kg	ca. 3,3kg

Standard stock items

Subject to technical modifications

Three-phase - UPS - modules

RSNT 20GU - RSNT 60GU

comp. VDE 0570 part 2-6, EN 61558-2-6

Noise transmission EN 55011 class B (industry), EN 55022 class B (Telecom)

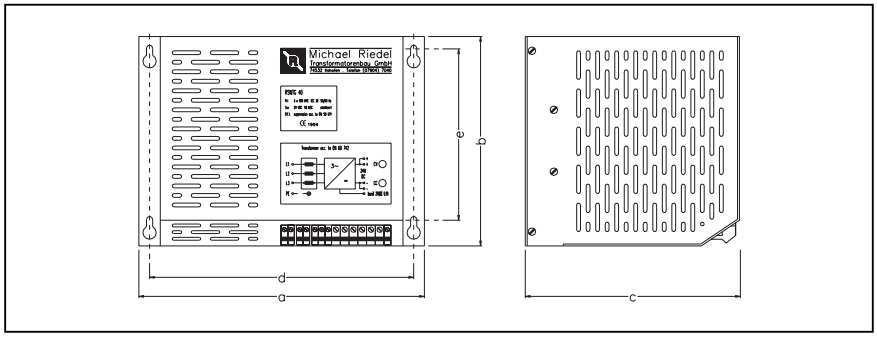

Technical data for model	RSNT 20GU	RSNT 40GU	RSNT 60GU
Input			
Mains input voltage	3 x AC 400 V		
Mains input voltage range	+ 15 % to – 15 %		
Frequency	50 Hz/60 Hz		
Input current	1,3 A	2,6 A	3,7 A
Input fuses	external (thermal-magnetic overload release)		
Output			
Output voltage	DC 24 V stabilized, twin terminals, externally adjustable 0... DC24 V		
Status display	LED green / yellow (U / I)		
Zero potential contact centralized alarm	for trouble (overtemperature, undervoltge and overload)		
Switch off input	to take unit out of service connect terminal with 0V		
Indication UPS-mode	break contact to 0V		
Output current adjustable	0...20 A	0...40 A	0...60 A
Residual ripple	< 30 mV RMS		
Short-circuit proofing	constant current operation		
Load stabilization dynamic	< 100 mVss / 500µs		
Stability under constant conditions	< 0,05 %		
Mains stabilization	< 0,05 %		
Overtemperature protection	thermal switch-off when overtemperature > 85°C		
RFI suppression	VDE 0875 / EN 55011		
Ambient temperature	-10... +40°C		
General data			
Test voltage transformer	between input and output complying to regulation (safety transformer)		
Directives	VDE 0570 part 2-6, EN 61558-2-6, EN 61000-3-2, EN 61131-2/part 2		
CE mark	yes		
Installation orientation	vertical		
Cooling	convection		forced air
Type of connection	screw-type terminal, finger-safe comp. UVV (VBG4)		
Connection data	fine strand max. 4 / 10 mm^2		fine strand max. 4 / 16 mm^2
Mounting	mounting brackets with keyhole attachment		
Protection rating comp. VDE 0470 / EN 60529	IP 20		
Safety class comp. IEC 536, VDE 0106 T1	I		
Insulation class	E		
Dimensions in mm approx. (a x b x c)	250 x 202 x 200	300 x 220 x 222	330 x 250 x 237
Mounting template in mm approx (d x e)	228 x 161	278 x 179	308 x 209
Article no.	0255-000020GU	0255-000040GU	0255-000060GU
Copper weight in kg	3,4	5,8	8,5
Total weight in kg	13,0	22,5	26,5
Options			
Remote control 0 - 10V	for U / I		
Remote control 4mA - 20mA	for U / I		

Subject to technical modifications

Standard stock items

Three-phase - UPS - modules

Power packs with UPS control function

RSNT 20GU to RSNT 60GU comp. to VDE 0570 part 2-6, EN 61558-2-6

Noise transmission EN 55011 class B (industry), EN 55022 class B (Telecom)

Product description

Standard switch power packs of series RSNT...G equipped with option U (UPS added) can be operated as control units with mains identification. Combined with a lead acid or nickel-cadmium-battery of fitting size and capacity, the power pack RSNT...GU can bridge the output voltage over a defined time period during mains voltage dips or breakdowns. The possible time period depends solely on the battery's capacity. An undervoltage interruption is integrated for battery protection.

We recommend Riedel-chargers series RLG or RLEC for battery recharging.

For control of the RSNT...GU a terminal connection (Off) is attached allowing power pack's switch off (connect terminal to 0V). At mains breakdown an alarm contact (UPS) opens, i.e. information for processing can be taken from its terminal. The contact is connected with 0V in closed condition (UPS-ready = open, UPS-run = 0V).

Without battery the unit can be applied as a normal power pack.

Functions:

- full-automatic operation
- **voltage adjustable 0-24VDC stabilized**
- **current adjustable 0-20/40/60ADC stabilized**
- overtemperature protection
- switch off input (for shutdown RSNT...GU: connect terminal "OFF" with 0V)
- switch off at under- and overvoltage
- indication constant current or constant voltage operation via LED (LED green = CV, LED yellow = CC)
- indication UPS-operation via contact against ground (UPS-contact open)
- zero potential centralized alarm (trouble - contact is open) activated when
  - unit's operation temperature exceeds range
  - undervoltage battery
  - switch off input activated
  - overload resp. short circuit

Block diagram:

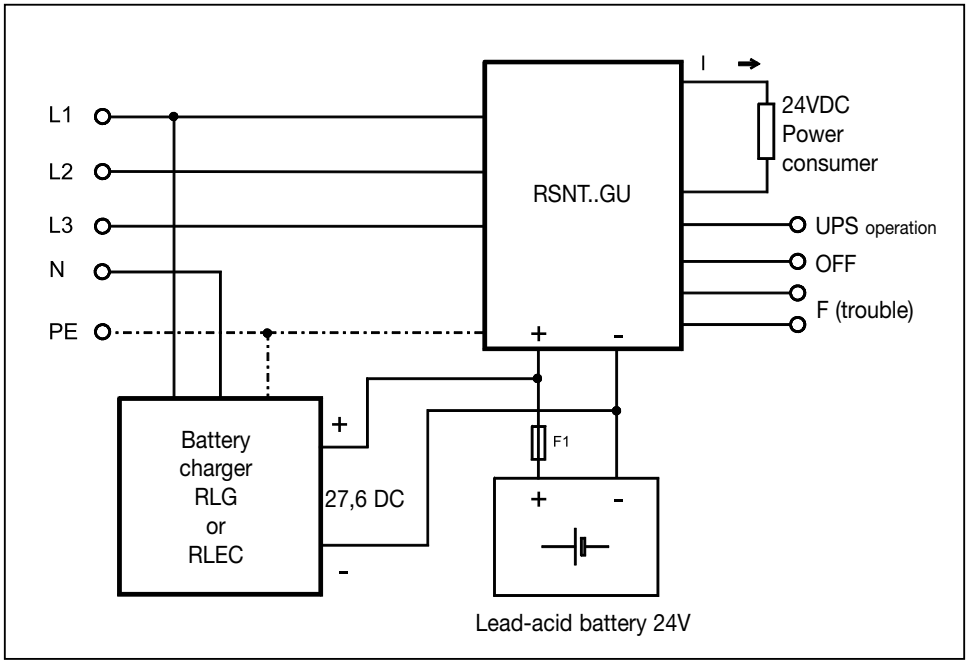

Standard stock items

Subject to technical modifications

Produktion: www.querformat.info rd/qf/04.03/900

Over 25 years practice in quality products

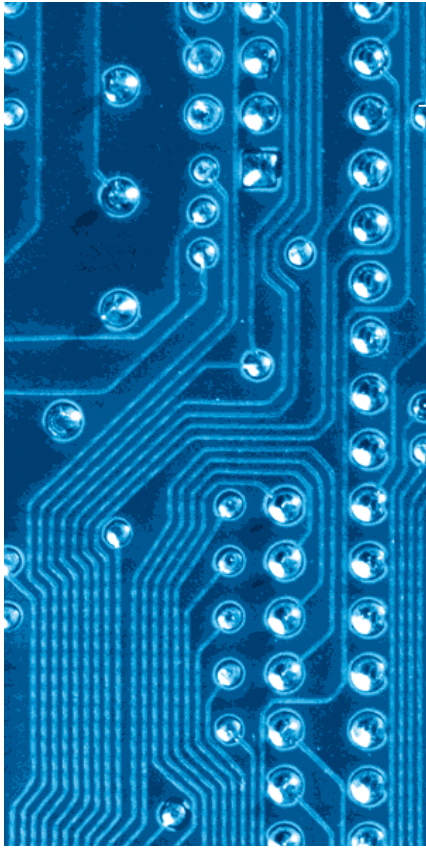

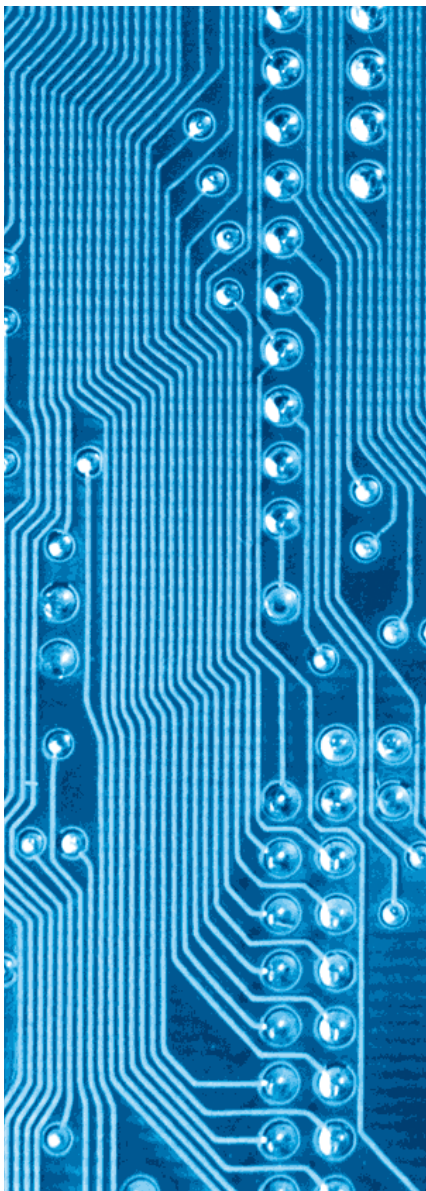

Michael Riedel

Transformatorenbau GmbH

Max-Eyth-Straße 10 · D-74532 Ilshofen-Eckartshausen
Telefon (0 79 04) 7 04-0 · Fax (0 79 04) 7 04 50
www.riedel-trafobau.de · info@riedel-trafobau.de